Revenue Management: Practice, Adoption, and Impact

Supplementary resource

Frederick Chang Yu Ng

About this resource

This resource presents the seven organisational reports prepared as part of within-business analysis in the phase one fieldwork. It supplements the fieldwork results reported in Chapter 4, section 4.2 of the thesis by providing detailed descriptions of revenue management practices at the case study sites. These descriptions are not intended to detract from the content of the thesis, which focuses on comparisons across organisations.

A fact sheet and an appendix of interview findings are presented for each organisation. The fact sheet summarises the case. The interview findings provide the evidence used to analyse revenue management practice. Additional resources are presented for when further analysis is undertaken for the organisation.

Note that these reports were written at the completion of each case study. Hence, they use terms and frameworks in different stages of progress. Differences from the thesis can be found in terminology (e.g. *inventory allocation* is termed *yield controls*), final indicator classifications (e.g. the practices which comprise the various levels of each indicator), and decision tree structure. Names are disguised to protect the identity of the organisations. Sensitive data is also withheld at the request of organisations.

Contents

Airline

- Fact sheet 4
- Airline – Appendix 1: Interview findings 12
- Airline – Appendix 2: Outline of the forecasting approach 29

BigStay

- Fact sheet 31
- BigStay – Appendix 1: Interview findings 40
- BigStay – Appendix 2: Price matrix approach 66

MediumStay

- Fact sheet 67
- MediumStay – Appendix 1: Interview findings 74

SmallStay

- Fact sheet 92
- SmallStay – Appendix 1: Interview findings 100

BigFood

- Fact sheet 116
- BigFood – Appendix 1: Interview findings 124
- BigFood – Appendix 2: Ingredient count analysis 147

SmallFood

- Fact sheet 149
- SmallFood – Appendix 1: Interview findings 156

Retailer

- Fact sheet 161
- Retailer – Appendix 1: Interview findings 170

REVENUE MANAGEMENT

Review of current practices

Airline

Executive summary

This report assesses revenue management practices at *Airline* based on a series of interviews with head office managers. We classify the business's revenue management as *analytical*. That is, demand-management and resource-management are informed by analytical outputs with formal data collection. This reflects the organisational structure and business strategy. A detailed summary of the interviews grouped by theme is also presented.

Overview

We classify your organisation as having *analytical* revenue management:

Experience-based		Balanced		Analytical
1	2	3	4	5

Analytical businesses use formal and systematic processes to understand and maximise profits. Pricing and product/service availability are reviewed on a daily basis and such decisions are aided by computer software. Detailed data is available for all past transactions. This data is combined with studies of customer sensitivity and operating standards when making revenue management decisions.

Approach

We use a two-stage process to classify revenue management in your organisation:

1. We evaluated the extent to which you employed seven key activities of revenue management.
2. Scores are fed into a decision tree to classify your organisation's revenue management.

Activity scores

Demand-management

Pricing 4

Yield controls 4

Resource-management

Product offerings 4

Duration 4

Analysis

Demand analysis 4

Data types 4

Data collection 4

Figure 1: Revenue management at Airline

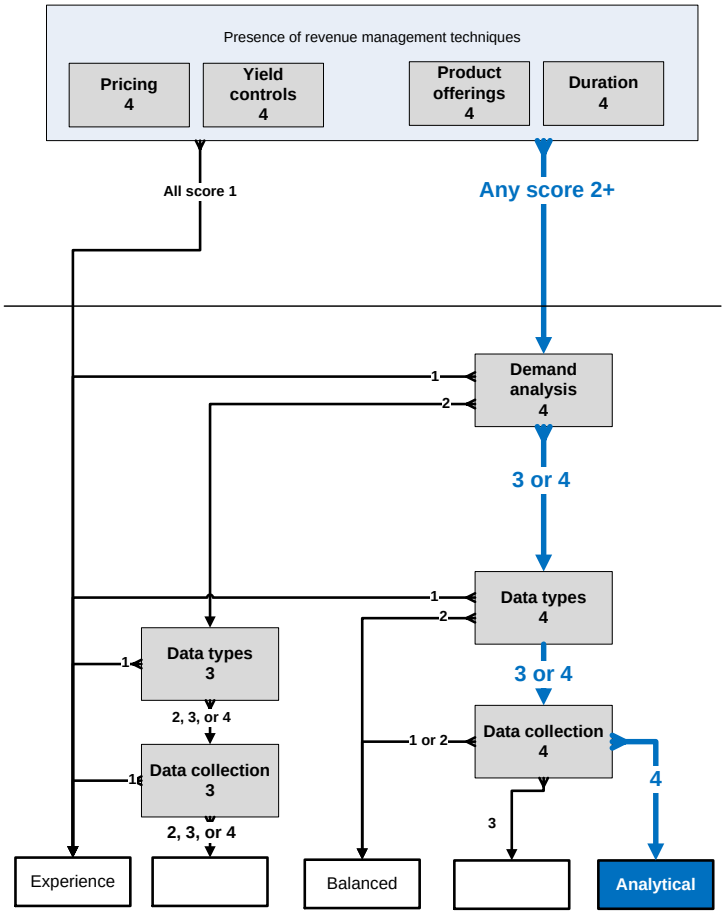

Sources consulted

The following sources were used in examining revenue management in your organisation.

- Interviews:
  - Revenue management manager
  - Pricing manager
  - Marketing manager
- Publically available documents:
  - Company website
  - Annual reports – 2009 to 2011
  - Interim reports – 2009 to 2011

Range of practices

We locate your organisation's revenue management through these seven key activities. Our review compares the practices found in your business against descriptions from existing academic research. Each activity is measured on a 1-4 scale; a '4' reflects *analytical* revenue management while a '1' reflects *experience-based* revenue management. This scale is designed to encompass all organisational settings and so certain practices may not necessarily be appropriate for your organisation. A summary of the interview(s) is included as an appendix at the end of the report.

Pricing

This activity assesses differential pricing in your organisation. Differential pricing is the practice of charging different prices for products / services based on what different customers are willing to pay. This helps in getting the most revenue from each individual customer.

1	2	3	4
Prices are not based on demand patterns or customer willingness to pay.	Prices reflect differences in demand across products / services.	Prices reflect differences in demand across customer types and products / services.	Prices reflect differences in demand across time, customers, and products / services.

Current practice

- Objective of pricing is to create a set of pricing bands that will satisfy many different customer types.
- Pricing reflects differences in customer behaviour across different markets.
- Competitor activity hinders pricing based on customer willingness to pay.
- Resource requirements are a secondary consideration in ongoing pricing.
- Revenue management is interdepartmental, with several departments working together on pricing, yield controls, and product creation.

Yield controls

This activity assesses capacity reservation in your organisation. Capacity reservation is the practice of reserving products / service capacity for more profitable customers during times of high demand. This helps in maximising the revenue earned from the number of products / services provided.

1	2	3	4
Products / service capacity are not reserved for more profitable customers.	Products / service capacity are reserved for more profitable customers. These are informal guides.	Products / service capacity are reserved using formal limits. These limits are infrequently reviewed.	Products / service capacity are reserved using formal limits. These limits are regularly reviewed.

Current practice

- Pricing aims to capture a range of different willingness to pay, while yield controls restrict sales to the most profitable customers.
- Ongoing opening and closing of pricing bands is the standard yield control technique.
- Tactical promotions complement ongoing opening and closing of pricing bands when a strong market response is required.
- In comparison, fewer emergency responses are in place to manage excess demand.
- Yield controls are highly formalised, primarily using computer generated outputs.
- Opening and closing of pricing bands are the main focus of the revenue management department. They work with related departments on other aspects of yield controls.

Product offerings

This activity assesses the use of product differentiation in your organisation. Product differentiation is the practice of designing your product / service range to target different customer segments. This helps the use of differential pricing and yield controls by discouraging customers from buying a cheaper product.

1	2	3	4
Business only has one product / service; or product / service range not designed for customer segmentation.	Product / service range designed for customer segmentation. Offerings require different physical resources.	Product / service range designed for customer segmentation. Different offerings are made up of pre-existing offerings.	Product / service range designed for customer segmentation. Many offerings use the same physical resources.

Current practice

- Product range is structured around incremental additions to a base offering.
- Most products use similar resources and processes. However, certain product types have significantly different requirements.
- A range of customer, competition, special event, and regional factors are considered when developing product types.
- Low cost carriers and growing popularity of internet bookings weakens the effectiveness of traditional product differentiation techniques.

Duration

This activity assesses the use of duration control in your organisation. Duration control is the practice of managing the time taken (overall time and variation in time) to create a product or serve a customer. This helps the use of differential pricing and yield controls by making customers more predictable. It also helps to increase the number of customers that can be served by your organisation.

1	2	3	4
Duration control is not actively managed or focuses on entire processes.	Duration control focuses on bottleneck activities. The aim is to reduce total duration.	Operating procedures vary between busy and slow periods. Informal guides are used. Only internal activities are managed.	Operating procedures vary between busy and slow periods. Formal standards are set. Both internal and external activities are managed.

Current practice

- A number of strategies are used to reduce time and cost of check-in.
- Creating products help funnel customer behavior, reducing variance. There is a tradeoff between low variance and appealing to a range of customer types.
- Industry trends towards shorter booking windows weaken the ability to predict customer behaviour.
- Overbooking is used to extract value from natural variability in customer behaviour.

Demand analysis

This activity assesses the methods used in analysing demand in your organisation. Analytical revenue management relies on statistical or mathematical models to understand customer demand. This helps in detecting patterns in demand to inform pricing, yield controls, product offerings, and duration.

1	2	3	4
No active demand analysis; or demand analysis uses owner intuition informed by experience.	Demand analysis uses owner intuition informed by general management information systems.	Demand analysis uses statistical models informed by general management information systems.	Demand analysis uses statistical models informed by specifically collected information.

Current practice

- Analysis focuses on forecasted sales and customer behaviour, themes common across all businesses.
- There is a strong emphasis on numerical analysis (software based and manual) to inform revenue management decisions.
- Computerised analysis allows rigorous investigation of day-to-day transactions using historical data.
- Human analysts and manual policies provide strategic/tactical data for “corner” cases to improve computer-based analytical outputs.
- Business configuration, competition and industry standards drive analytical sophistication and the methods used.
- The revenue management department’s expertise in data analysis and customer behaviour is used to support decision making in other areas of the business.

Data types

This activity assesses the types of demand data collected by your organisation. Analytical revenue management relies on in-depth records of historical trends. Recording trade details, operating performance, and customer characteristics for individual transactions enriches demand analysis.

1	2	3	4
Demand data is not actively recorded. Transactions are recorded for compliance or cost control reasons.	Demand data is recorded but is highly aggregated. Only summaries are kept, combining a number of transactions.	Basic demand data is recorded for every transaction. Data provides tactical information.	Extensive demand data is recorded for every transaction. Data provides strategic information and helps improve revenue management systems.

Current practice

- Detailed data is kept at the individual transaction level to inform ongoing analysis.
- Yield controls and tactical analysis focus on data at the individual transaction level. Ad hoc analysis sometimes uses information at this detailed level.
- Customer demographic data is collected alongside transaction data to inform customer behaviour analysis.
- Industry and competition data are available at higher aggregation and is used to complement flight level data.
- Other departments are responsible for tracking input and process costs.

Data collection

This activity assesses the way demand data is collected in your organisation. Analytical revenue management relies on accurate records of historical trends. Regular collection of transactional, competitive, and environmental demand data improves accuracy in demand analysis.

1	2	3	4
Demand data is not collected. Experience and familiarity are the only sources of historical records.	Demand data is collected manually but only infrequently or for one-off projects.	Demand data is collected manually and regularly.	Demand data is regularly collected using automated systems.

Current practice

- Transaction data collection and processing is largely automated.
- Where possible, automation is introduced to collect data about competitor and customer characteristics. Changes have been largely driven by the internet.
- A departmental organisation structure means that a lot of data is provided to and by other functional areas.

Airline – Appendix 1: Interview Summary

Pricing

Objective of pricing is to create a set of pricing bands that will satisfy many different customer types.

- Goal is to offer different prices based on customer willingness to pay
    - However, resource requirements and competitor activity hinders this goal.
    - Pricing can be divided into two groups: standard pricing bands for regular transactions, and tactical promotions as major response techniques.

- Standard pricing bands present a set of price points that are used for ongoing customer sales.
    - More price bands are created for markets with greater strategic importance. For example, ten or more price bands for such markets compared to five or more price bands for other markets.
    - Once set, these price points are not reviewed on a regular basis.
    - Price points also change from season to season.

- Tactical promotions are discounted prices introduced in response to non-standard market activity.
    - These are cheaper than standard pricing bands but have additional restrictions or other enticements built in. They are changed more often than standard pricing bands.
    - Changes in response to competitor activity: this is coloured by strategic choices such as avoiding direct competition.
    - Changes in response to low customer demand: forecasts of future performance signal the need for tactical promotions.
    - Tactical fares are often accompanied by media advertisements.

Pricing reflects differences in customer behaviour across different markets.

- Standard pricing bands are built in acknowledgement of different reasons for travel and different willingness to pay.
    - Within each product and each market are a set of price points making up the pricing-bands available. These points span a wide range of prices and can be changed over time.
    - Prices differ between geographical markets due in part to relative market position. This is determined by brand awareness and service frequency.

- Price points are developed from historic information.
    - Activity in similar routes is used when setting up a new price structure.
    - Higher or lower pricing bands are used depending on the expected demand of the new route relative to the existing route.
    - Refer to Demand Analysis section for more discussion.

- Product offerings are also used to differentiate customer groups.
    - Refer to Product Offerings section for more discussion.

Competitor activity hinders pricing based on customer willingness to pay.

- Competitor activity triggers the need to override standard pricing bands offered. This may involve the use of tactical promotions.
    - A simple price-matching approach is not always adopted. Three choices are considered when competitors introduce discount fares:
        - No change: managers anticipate that market demand exceeds supply from competitor's promotion.
        - Adjust prices: managers introduce tactical promotions to protect their market share on relevant flights.
        - Wait and see: managers monitor competitor responses and wait for additional internal demand before making a decision.

- Recently, market forces have created very low price points in the industry. This is caused by a mix of customer demand and airline competition.
    - These new price points have attracted new levels of demand.
    - This has also led to a tendency for customers to travel at shorter notice.
    - The entry of low cost carriers has also 'flattened' the range of price points used at *Airline*.
    - Product configurations have also weakened with the entry of low cost carriers. Refer to Product Offerings section for more discussion.

- The internet has increased pricing transparency, strengthening the effect of competitor activity on pricing.

    - Most airlines have online stores advertising their prices. They also circulate regular emails containing new promotions. Organisations may also offer price matching, with the customer receiving an additional discount if they find a cheaper flight.
    - Accordingly, customers are considered more 'savvy' than previously, increasing their sensitivity to market activity.
    - This transparency provides a benefit to *Airline* for evaluating market position.

- Collaborative arrangements also restrict pricing.
    - However, direct pricing arrangements can only be managed if the business owns or has a very strong agreement with the partner.
    - Code share agreements are a common form of partnership. This involves partners exchanging 'blocks' of capacity from other airlines. Each partner is free to apply their own pricing and yield controls to the block.

Resource requirements are a secondary consideration in ongoing pricing.

- Costs and resource configurations are mainly considered for new activity.
    - Relative importance of cost depends on level of competition.
    - Space taken on the plane also factors into pricing different product types. Prices are set in acknowledgement of the relative resource requirements of each product.

- Prices are reviewed when input costs change significantly.

    - Input costs are treated using a management by exception approach. Their effect on pricing is closely reviewed once they exceed a set level.

- However, operating costs are not used in a cost plus mark-up calculation to set prices.
    - This is due to the cost structure in the airline industry; variable costs are considered relatively small compared to the fixed costs of a flight.
    - Low marginal costs (on committed flights) means that demand plays a stronger role in pricing than input costs.

Revenue management is interdepartmental, with several departments working together on pricing, yield controls, and product creation.

- Revenue management is overseen by a number of departments with different functional and geographic responsibilities.
    - Functional: responsible for activities (e.g. pricing, marketing, networks).
    - Geographic: responsible for regions (e.g. domestic, short-haul international, long haul-international).

- A dedicated revenue management department works with pricing and marketing to provide numerical analysis on risk and business strategy.
    - This department focuses on yield controls, which involves opening and closing these fixed price points depending on actual demand and forecasted activity. This is considered the primary method of revenue management.
    - Varying price points is not considered a main lever of revenue management. It is viewed as a separate arm of revenue management.

- The revenue management department plays a role in cost analysis, but focuses on revenue on a day-to-day level.
    - Costs play a stronger role when developing a new product than when analysing an established product. For established products, the revenue management department deemphasises cost.

- Functional areas with regular relationships with revenue management:
    - Pricing: creates the set of price points used in yield management.
    - Marketing: evaluating the need for promotional activity and forecasting results.
    - Networks: assessing route profitability and the need for more capacity in certain areas. Also provides operating costs for various sectors and aircraft types.
    - Finance: provides operating costs for various sectors and aircraft types.

Yield controls

Pricing aims to capture a range of different willingness to pay, while yield controls restrict sales to the most profitable customers.

- Goal is to capture the most value from customers to maximise revenue from a flight.
    - Pricing bands are opened and closed depending on both actual and forecasted demand, adjusted on at least a daily basis.
    - In contrast, pricing bands are only revisited if there is a significant change. Otherwise they can be fixed for a year.
    - This involves a constant balancing of average price and average quantity.
    - Yield controls are implemented using a range of techniques. Refer to the following sections for more details.

Ongoing opening and closing of pricing bands is the standard yield control technique.

- The fundamental activity is the opening and closing of different pricing bands depending on different levels of demand.
    - Opening low pricing bands: done when demand is lower than expected or when forecasted demand is significantly below capacity.
    - Restricting low fare classes: done when demand exceeds forecasts and demand is likely to exceed capacity.

- Managing pricing band availability delivers most of the benefit earned from yield controls.
    - Advertising and marketing activity is not usually needed for ongoing revenue management.

Tactical promotions complement ongoing opening and closing of pricing bands when a strong market response is required.

- Tactical promotions are a more extreme version of yield controls. They are introduced when demand is very low.
    - This may be due to a pocket of low demand or to protect existing business from competitors.
    - Tactical promotions are considered effective because the market is responsive to price promotions. One manager comments that travellers are generally willing to book at short notice.

- Tactical promotions are considered a competitive necessity but are not desirable.
    - Standard channels have been developed to advertise tactical promotions.
    - Tactical promotions introduce additional costs (e.g. cost of advertising) while reducing the revenue earned per flight (i.e. cheaper price per ticket).
    - Even if *Airline's* standard prices are competitive with competitor promotions, advertising may still be needed. This is needed to avoid customer perception that prices are more expensive at *Airline*.

In comparison, fewer emergency responses are in place to manage excess demand.

- There is no corresponding emergency high price point for periods of very high demand. This is managed by ongoing opening and closing fare classes.
    - In times of high demand, ongoing yield management will automatically 'protect' more seats for high price bands.
    - When high demand is forecasted in the long term, capacity may be added. Refer to notes below for more details.

- Different ticket types help in capturing more revenue in times of high demand. Customers must book a more expensive ticket type as the plane is filled up.
    - This overlaps with pricing which aims to capture a range of customer willingness to pay. Refer to the Pricing section for more discussion.

Yield controls are highly formalised, primarily using computer generated outputs.

- Standard decisions to open and close pricing bands are based on system-based analytical results. These decisions are automatically fed into the reservation system.
    - Inventory availability is structured around computer modelling results.
    - This assesses on-hand bookings and expected behavior of future bookings.
    - Refer to Demand Analysis section for more details.

- Human input is mainly in the form of adjusting model parameters.
    - Analysts adjust the expected demand parameters depending on their expectations. They do not directly adjust available inventory as part of standard revenue management.

Opening and closing of pricing bands are the main focus of the revenue management department. They work with related departments on other aspects of yield controls.

- Managers comment that there are three levels of revenue management:
    - Tactical: competitive actions and day-to-day management. Pricing and marketing departments play a major role in this process. Refer to notes on tactical fares and the Pricing section for more discussion.
    - Medium: involves optimally opening and closing pricing bands. This is the focus of the revenue management department.
    - Long term: focused on flight network decisions such as adding, emphasising, deemphasising, or removing certain routes. Networks and fleet departments play a major role in this process.

- Capacity is generally assumed to be fixed but the revenue management department is constantly searching for times where adding capacity is valuable.
    - Analysts use fixed capacity in their work but may detect times when increasing capacity would be valuable.
    - Ongoing interdepartmental communication assesses the need for and feasibility of adding additional capacity.

- The structure of *Airline* allows some flexibility in short term capacity management on particular flights.
- Networks generally have a longer term focus (1 to 5 years). Revenue management works on a shorter term focus for revenue management (up to 1 year ahead).

Product offerings

Product range is structured around incremental additions to a base offering.

- Within each class of carriage (e.g. economy vs. business), more expensive products add incremental options over cheaper products.
    - Examples include larger luggage allowances, food and beverage, entertainment, and pre-flight services.
    - Other standard rate types follow a similar structure and are built around incrementally adding features such as seat request, loyalty rewards, flexible or refundable tickets, and extra bags.

- Different product types facilitate segmentation to target broad customer groups.
    - For example, allowing targeted advertising promotions to certain market segments.

- Radically different products are not the main tool for segmenting the market.
    - New products are not necessarily required to segment the market or to control bookings. Ongoing pricing and yield controls can be used to achieve segmentation.

Most products use similar resources and processes. However, certain product types have significantly different requirements.

- Many product options are differentiated by restricting amenities and ticket terms or are differentiated by quantity purchased.
    - For example, certain ticket types restrict luggage allowances and whether tickets are refundable.
    - Certain products are made by bundling together existing capacity. For example, *Airline* offers a frequent flyer product which effectively offers a discount on select travel.

- Some products require additional advertising or require their own dedicated marketing channels.
    - Standard promotions are generally advertised on the company's website and email channels.
    - Radical new products require significant time and resources to promote the change and to educate customers about the options available.
    - Each region also has its own set of fare products, introducing additional product variation.

- Some products require additional in-flight staff attention, special equipment, and different aircraft layout.
    - Aircraft capacity varies depending on the number of premium seats installed.
    - Once an aircraft is configured, it is costly to change the seat configuration. This restricts yield controls and pricing.
    - Certain products offer passengers flexibility in when they want to be served food and beverage. They may also require greater staff to customer ratios in-flight.

A range of customer, competition, special event, and regional factors are considered when developing product types.

- Packages may be created around special events, activities, or holiday locations to take advantage of demand spikes.
    - These packages include airfares as well as discounted items such as accommodation, airport transfers, and activities.

- The range of viable product differentiation strategies differ depending on sector.
    - This depends on the general customer makeup for the sector. For example, certain routes primarily serve leisure customers.
    - Certain flight features are more appealing on longer flights, providing opportunities for product differentiation.
    - Product terms and conditions are developed by revenue management along with marketing and pricing managers who are responsible for various regions.

- Products are often introduced for reasons other than customer segmentation.
    - Extend the network by covering new routes.
    - Manage low demand pockets.
    - Randomise product range to add market interest.
    - Market exposure and brand image.

Low cost carriers and growing popularity of internet bookings weakens the effectiveness of traditional product differentiation techniques.

- Low cost carriers are making it difficult to sell the same core product at different price points.
    - Ticket terms and conditions previously helped segment customers.
    - However, entry by low cost carriers has weakened these types of conditions. This is because they offer flights at a low price point without the restrictions imposed by full service airlines.
    - This has prompted the need for more expensive methods of product differentiation.

- Easy internet bookings limit the ability for businesses to add value by bundling different products into a package deal.
    - Packages remain popular in certain markets where third party wholesalers bundle flights with accommodation.

Duration

A number of strategies are used to reduce time and cost of check-in.

- These strategies also help reduce the number of staff required for check-in processing.
    - Self-service kiosks and bag drops quicken check-in.
    - Internet and information technology have been leveraged to help reduce administration costs of check-in.

Creating products help funnel customer behaviour, reducing variance. There is a tradeoff between low variance and appealing to a range of customer types.

- A set of fixed product options force customers to choose in advance how they will use the service.
    - This helps to make customer behaviour more predictable. For example, whether they want to have an unchangeable flight with few added comforts; or want to have the option to change their mind (a refundable flight).
    - Having too few product types reduces the ability to segment customers and identify their willingness to pay to fly.
    - For example, a customer may signal that they are less predictable by buying a higher price product.

- Premium services create more variability in customer usage compared to economy options.
    - Higher price point ticket types often allow flexibility in flight dates and in-flight service, introducing more variability.
    - Cheaper ticket types charge penalties for change and are non-refundable tickets, discouraging variability in service usage.

Industry trends towards shorter booking windows weaken the ability to predict customer behaviour.

- Many customers are booking flights closer to departure than previously.
    - This makes it harder to analyse demand and changes the types of products that can be offered.
    - Extent of duration variation differs between customer segments and market types.
    - Managers attribute this trend to the prevalence of low price point fares as well as greater levels of discretionary travel.

- However, booking patterns and popular travel periods are still believed to repeat themselves from year to year. This helps offset the variance from shorter booking windows when analysing demand.

Overbooking is used to extract value from natural variability in customer behaviour.

- Overbooking is used to capture revenue from empty seats caused by no-shows. This is factored into booking limits.
    - No-show rates are more predictable in certain sectors and closer to the departure date.

    - The data formats available and customer behaviour mean no-show rates are more detectable in a short time frame before departure.

- This helps offset the variation in customer behaviour while taking advantage of the variation.
    - Overbooking lets the organisation earn more money on a flight, by minimising the number of empty seats on a plane.
    - It provides an internal solution (booking more) to an external problem (varied customer behaviour).
    - Internal solutions change the business's activities to meet a set customer problem. External solutions work to change customer behaviour, rather than change internal activities.
    - Contrast this with non-refundable flights for an external solution to no-shows.

- While potentially very valuable, overbooking can also be a costly activity
    - These include financial (compensation) and non-financial (negative goodwill) costs.
    - Costs are incorporated into the overbooking model as well as through set policies.

Demand analysis

Analysis focuses on forecasted sales and customer behaviour, themes common across all businesses.

- Aim to predict future demand based on current and historical activity.
  - Historical activity is viewed as an excellent indicator of future activity.
  - Advance bookings also signal expected performance.

- Aim to understand customer behaviour based on response trends and demographic data.
  - Price sensitivity / elasticity across markets.
  - Market and customer demographic makeup: Market segments differ in terms of the number of destinations, customer make-up, stopovers, and booking channels.
  - Customer behaviour provides a 'building block' to predicting flight revenues.

- Day-to-day analysis aims to predict and improve revenue per available seat kilometre.
  - This is the main measure of performance which combines load factors and average yield. One manager comments that these two must not be looked at in isolation.
  - This measure is complemented by cost per available seat kilometre. It is significant to the revenue management teams at the time of new product development or product alteration.

- Differences in analysis are mainly in the level of analytical rigour and sophistication.
  - There is a strong focus on computer-based, mathematical analysis in contrast to human-based, intuitive analysis.
  - Analysis focuses on modelling and predicting trends, rather than point-by-point analysis or just eye-balling trends.
  - For example, rather than taking ad hoc observations of competitor activity, there is a focus on capturing and understanding trends.

There is a strong emphasis on numerical analysis (software based and manual) to inform revenue management decisions.

- Strong reliance on models and revenue management theory rather than manager intuition.
  - Based on operations research and economics concepts.
  - Close attention is paid to assumptions of the computation models. For example, independence of each flight.

- Numerical analysis is central to business decisions as it provides a justification for activity.
  - Mathematical analysis is critical in decision making.
    - Evaluating bookings.
    - Tactical activity.
    - Allocating aircraft across the network.
    - Aircraft configurations.

- Some degree of manager judgement and experience-based explanations is still necessary, but is grounded in data rather than relying on casual observation.
  - Extensive data records allows for systematic search for trend explanations.

        - Analysts can explore detailed customer characteristics data to understand the types of travellers and common itineraries.
        - Also done to understand underlying market structure: how have our captured customer population changed? Where did the customers come from?
    - Manager search is necessary when interpreting reasons for data trends.
    - However, experience can reduce the need for certain analysis if certain trends occur often.

Computerised analysis allows rigorous investigation of day-to-day transactions using historical data.

- Demand analysis mostly relies on revenue management software. This is an externally purchased software system package containing a number of modules.
    - Software uses mathematical and statistical approaches for optimisation and modelling customer behaviour.
    - Examples of modules include:
        - Forecasting.
        - Optimisation.
        - Modelling customer classes with non-standard behaviour.
    - Refer to Airline – Appendix 2 for a description of the forecasting structure.

- Historical information is the basis for analysis and informs a range of activities.
    - Yield controls: the number of seats to allocate protection levels for each pricing band.
    - Advertising required.
    - Setting up a new flight.
    - Formulating overbooking.

Human analysts and manual policies provide strategic/tactical data for "corner" cases to improve computer-based analytical outputs.

- There are three broad levels of analysis with different levels of human involvement.
    - Revenue management system: the fully automated, computerised system.
    - Regular reporting analysis: analysis within the revenue management department analysis, which is also automated.
    - Ad hoc analysis: analysts mine data from a data warehouse. It is manually analysed and presented using spreadsheeting and database tools.

- Human analysts regularly provide manual analysis to refine computer modelling. This is done by adjusting parameters; computer systems still perform most of the analysis.
    - Identify competitor activity.
    - Identify special events.
    - Incorporate brand reputation.
    - Manual analysis utilises Excel spreadsheets and Access databases with daily data mining.
    - Graphs and visualisations help analysis. For example, booking trend graphs help visualise the intake of bookings as they approach the departure date.

- Human input expedites trend detection, although models are capable of detecting trends.
    - For example, to account for seasonality.
    - Casual observation can also trigger in-depth analysis.

- Manual rules somewhat substitute for limitations of computer systems and analytical models.
    - Decision rules are used to account for special features of the business model.
    - These rules have been introduced following a detailed investigation.

Business configuration, competition and industry standards drive analytical sophistication and the methods used.

- This reflects the business structure, where different models suit different network structures.
    - Within the group of sophisticated demand analysis techniques, analytical methods can be analysed as a network (Origin-destination) or independently (Leg-based).
    - For example, managers comment that origin-destination analysis is valuable in a hub-and-spoke business model.

- Intense competition drives the need for rigorous analysis. Changing competitor dynamics may require a reform of data analysis.
    - Models need to be adjusted to consider ongoing competitor actions.
    - The introduction of low cost carriers has triggered a need for greater analysis.
        - In particular, very low price points have stimulated demand from new customer segments. This has led to shorter booking windows.
    - Additionally, low-cost-carriers triggered a need for reform in analysis.
        - To compete with low-cost-carriers, airlines have homogenised their product range. This means demand for different product types is no longer independent, potentially violating an assumption of most revenue management models.

- Changing information channels and new analytical tools enable new forms of analysis.
    - The growth of the internet as a booking channel allows greater clarity into competitor actions.
    - The power of analytical models change over time and new models may be developed.

The revenue management department's expertise in data analysis and customer behaviour is used to support decision making in other areas of the business.

- They work with networks when analysing the feasibility of adding capacity in the short term. networks and fleet are responsible for new aircraft purchases.
    - Revenue management departments regularly flag the need for short term capacity management.

- They work with marketing to analyse the 'realities' of new products and provide feedback on the effectiveness of promotions.
    - New product considerations include potential revenue earnable and possible cannibalization.

- Detailed recordkeeping helps in troubleshooting the cause of poor performing promotions and inform future advertising activity.

Data types

Detailed data is kept at the individual transaction level to inform ongoing analysis.

- Databases store detailed individual transaction at the passenger level to inform both standard and ad hoc analysis.
    - Booking data examples: price paid, time of booking, and booking channel (offshore, travel agent, online, call centre).
    - Itinerary data examples: locations travelled and number of customers flying direct versus those who connect.
    - Customer characteristics examples: age group, purpose of travel, and regular flyer/casual flyer.

- Records also retain forecasts made for every flight in order to review performance. This includes both the forecast and actual bookings.
    - Forecasts are available at several levels: flight, day-of-week, and booking class (price-point).
    - Several years' worth of historical departures data can be used in assessing forecast models. This may be reduced to a shorter history if the market has changed significantly.

- This level of detail allows transaction level analysis (see below) and offers flexibility in terms of extracting different levels of aggregated data.
    - Overbooking uses sector level and flight level (historic booking trend) data to inform no-show rates.
    - Short-term and long-term aircraft allocations use data at the flight level. For example, if new aircraft are needed for a special event. It also highlights any need to downsize capacity.
    - Pricing for new products rely on relatively aggregated information at the price point level.

Yield controls and tactical analysis focus on data at the individual transaction level. Ad hoc analysis sometimes uses information at this detailed level.

- Ongoing yield controls rely on data at the individual booking level.
    - Historical booking data is used in conjunction with forward bookings to assess the need for promotional activity.
    - Booking reports by day help evaluate sales promotions and price elasticity (relative size of spikes between sectors).
        - Provides detailed feedback for competitive position and the effects of competitor actions. For example, types of customer types lost or gained, and overall impact on total sales.
    - Refer to Yield Controls section above for more discussion.

- A review of the limitations of software optimisation for the current business model is an example of ad hoc analysis using individual transaction data.
    - Refer to Demand Analysis section above for more discussion.

Customer demographic data is collected alongside transaction data to inform customer behaviour analysis.

- For each transaction, a set of customer demographics are recorded. This includes booking details, itinerary data, and customer characteristics.
    - See above for specific examples.
    - This helps pinpoint the reasons behind flight performance, rather than relying on manual search or manager experience.
    - Channel booking popularity example: relative popularity of direct sales compared to travel agent sales for different customer types.
    - Sector popularity example: complete itineraries help in assessing the relative mix of domestic and international travel. Records also inform the common types of customers flying in each sector.
    - Customer willingness to pay example: incremental versus discretionary travel, elasticity of each market. This highlights the importance of tactical activity in each market.

Industry and competition data are available at higher aggregation and is used to complement flight level data.

- Specific competitor actions are captured to assess competitive position. Records are available for current activity as well as previous activity covering several areas:
    - Specials and tactical activity: informs demand parameters and the need for tactical promotions.
    - Long-term pricing: overall competitor fare changes and patterns in fare pricing – whether there is a tendency to charge more (or less) closer to date of departure.
    - Product strategies: schedule changes, new routes, product changes, and new aircraft.

- Market environment is regularly scanned for events which alter demand.
    - Examples include competitor exits and major events.

Other departments are responsible for tracking input and process costs.

- Networks and finance are responsible for evaluating the cost of operations.
    - They maintain records of the costs required to operate each sector with each aircraft type.
    - Foreign exchange rates are also tracked in order to help assess profitability.
    - Revenue management analysts does not keep cost records as part of their day-to-day operations.

Data collection

Transaction data collection and processing is largely automated.

- Computer systems collect and analyse bookings information with little manual input.
    - Booking information is automatically fed into analytical models which in turn automatically analyses the data. This is received from several channels such as travel agents and direct internet bookings.
    - Method of data collection is driven by the large volume of data received each day.
    - Daily data processing and analysis is automated, with exceptions flagged for review by an analyst.
    - For example, when analysing the forward bookings, pre-set points signal where re-optimisation is conducted. Managers review the outputs at these pre-set review points. Indicators are also used to flag flights which require additional analysis.
        - E.g. if there is a substantial number of new bookings or cancellations.

- Transaction data for certain customer types and events require manual collection.
    - Group bookings are treated differently as there are more opportunities to provide value-adding service. For example, groups can arrange travel with a consultant.
    - Automated analysis is complemented with data captured by experience and observation. For example, with special events.

Where possible, automation is introduced to collect data about competitor and customer characteristics. Changes have been largely driven by the internet.

- Before the internet, competitor information was difficult to capture. This made it difficult to assess the business's competitive position.
    - Examples of data sources include ad hoc promotions and manual search of available options.
    - This search process was resource intensive.

- Growth in information technology means that a lot of competitor data is automatically collected on a daily basis from competitor websites.
    - Staff also consult competitor websites for individual analysis.
    - This facilitates in-depth analysis of competitive position. Refer to Demand Analysis section for more discussion.

- Some customer data is collected through the business website.
    - Website visitors are invited to sign up for email updates about promotions.

A departmental organisation structure means that a lot of data is provided to and by other functional areas.

- A lot of data is provided to and from other departments. This sometimes requires additional staff to help facilitate communication.
    - Revenue management feeds capacity requests and route performance to networks.
    - Inter-department managers facilitate the regular relationship between analysts, revenue management, and marketing departments.

Airline – Appendix 2: Outline of the forecasting approach

- Current bookings provide the basis of forecasting. They effectively 'classify' the nature of the flight.
    - Actual bookings are used to understand the nature and popularity of the flight. This can be seen by the total number of bookings and the pattern of bookings.

- Once a flight is 'classified', the system uses historic activity and forecasting systems to predict how this type of flight usually behaves.
    - Forecasting systems break down non-linear patterns into linear segments. Each linear segment represents a time period where conditions are stable. Identifying times of stable conditions helps predict short term bookings.
        - Key parameters are monitored to detect major changes in demand conditions. These are mainly new bookings or cancellations.
        - Changing conditions triggers re-optimisation. See below for more discussion.
    - Historical activity is used to check how similar flights have behaved in the past, using this history to predict future bookings.
        - Forecasts and actual results on all previous flights are kept and consulted by the system.
    - Analysts will apply judgement if this particular departure is expected to differ from historical bookings. For example, an event may double expected demand.
    - The system provides different forecast for several very fine levels: Flight, day-of-week, booking class (price point).

Figure 2: Illustration of forecasting process

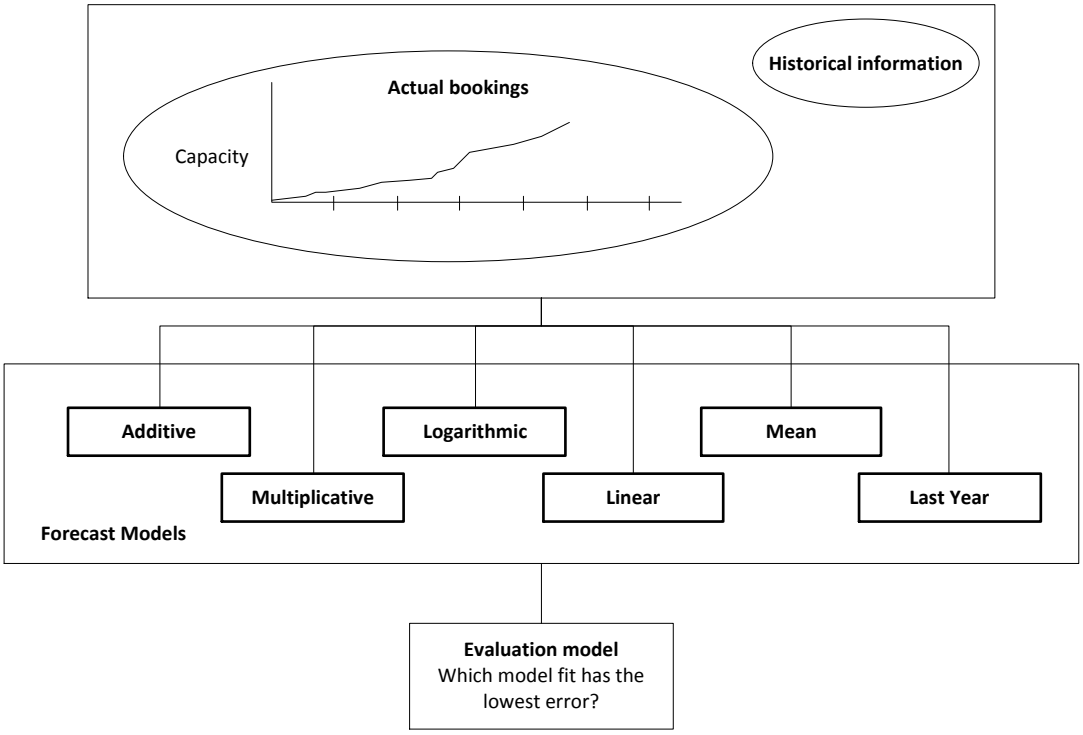

- Forecasts are generated by applying different forecasting models to actual data. An evaluation model compares the results of the different models and chooses the one with the best fit.
    - Examples of forecast models tested on the data:
        - Additive
        - Multiplicative
        - Linear
        - Mean
        - Last year
        - Logarithmic
    - Role of the evaluation model is to find the most robust forecast method for the individual flight.

- Re-optimisation occurs when a chosen set of parameters indicate change. This is done with the view of breaking up a non-linear curve into linear points.
    - Optimisations are redone several times in the life of a flight. This can require a change in the forecasting model used.
    - Examples of change include a substantial number of new bookings, cancellations, or complete flight data.

REVENUE MANAGEMENT

Review of current practices

BigStay

Executive summary

This report assesses revenue management practices at *BigStay* based on a series of interviews with managers and staff. We classify the business's revenue management as *balanced*. That is, demand-management and resource-management are informed by a combination of manager experience and analytical outputs with formal data collection. This reflects the organisational structure and business strategy. A detailed summary of the interviews grouped by theme is also presented.

Classification

We classify your organisation as having balanced revenue management:

Experience-based		**Balanced**		**Analytical**
1	2	3	4	5

Balanced businesses make profit focused decisions using a mix of manager experience and analytical outputs. Pricing and product/service availability are reviewed regularly, with adjustments made depending on how busy the business is expected to be. Revenue management decisions are made using manager judgment, informed by a review of historical trends and his/her expectations about future trends.

Approach

We use a two-stage process to classify revenue management in your organisation:

1. We evaluated the extent to which you employed seven key activities of revenue management.
2. Scores are fed into a decision tree to classify your organisation's revenue management.

Activity scores

Demand-management

Pricing 3

Yield controls 2

Resource-management

Product offerings 3

Duration 2

Analysis

Demand analysis 3

Data types 2

Data collection 3

Figure 3: Revenue management at BigStay

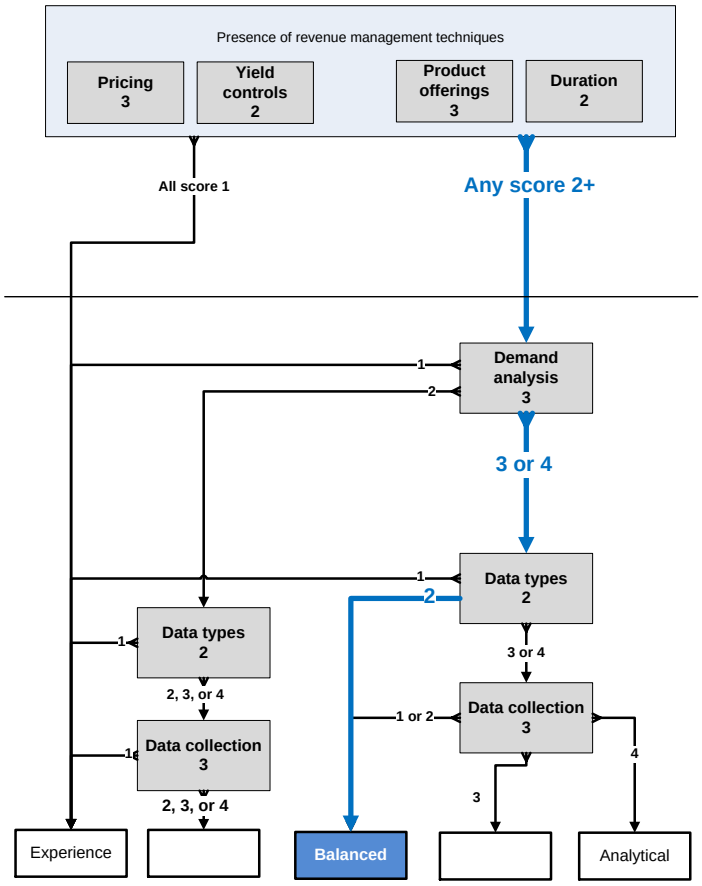

Sources consulted

The following sources were used in examining revenue management in your organisation.

Interviews:

- Marketing manager (National-level)
- Financial controller (National-level)
- Regional manager A (Area-level)
- Regional manager B (Area-level)
- Wellington Operations manager (Property-level)

Documents sighted:

- Key financial indicators report
- Membership sales report
- Graph of comparative industry occupancy
- Sample price matrix
- Guest information sheet

Other sources:

- Company website
- Annual reports (2007 – 2009)

Range of practices

We locate your organisation's revenue management through these seven key activities. Our review compares the practices found in your business against descriptions from existing academic research. Each activity is measured on a 1-4 scale; a '4' reflects *analytical* revenue management while a '1' reflects *experience-based* revenue management. This scale is designed to encompass all organisational settings and so certain practices may not necessarily be appropriate for your organisation. A summary of the interview(s) is included as an appendix at the end of the report.

Pricing

This activity assesses differential pricing in your organisation. Differential pricing is the practice of charging different prices for products / services based on what different customers are willing to pay. This helps in getting the most revenue from each individual customer.

1	2	3	4
Prices are not based on demand patterns or customer willingness to pay.	Prices reflect differences in demand across products / services.	Prices reflect differences in demand across customer types and products / services.	Prices reflect differences in demand across time, customers, and products / services.

Current practice

- Prices vary by room type and services used. This incorporates resource variation and reflects different customer needs.
- Pricing incorporates differences among customer groups. This is mainly done using different room types.
- Competition guides pricing decisions. The goal is to price according to intended strategic position, not to match competitors.
- Pricing decisions are decentralised and made at the property-level.
- Pricing responsibility has changed over time from head office pricing to front line empowerment.

Yield controls

This activity assesses capacity reservation in your organisation. Capacity reservation is the practice of reserving products / service capacity for more profitable customers during times of high demand. This helps in maximising the revenue earned from the number of products / services provided.

1	2	3	4
Products / service capacity are not reserved for more profitable customers.	Products / service capacity are reserved for more profitable customers. These are informal guides.	Products / service capacity are reserved using formal limits. These limits are infrequently reviewed.	Products / service capacity are reserved using formal limits. These limits are regularly reviewed.

Current practice

- Yield management is used to maximize revenue from highly variable customer volume.
- Current yield management revolves around customer groups and room types. A "10-5" pricing structure has been implemented nationwide.
- Yield is managed at a property-level with some regional oversight. Most properties rely on manager observations rather than a formulaic approach.
- Practices have evolved over time. Historically, prices were set at the start of the year and did not change according to actual demand.
- Competition and technology triggered this need to re-evaluate yield management.

Product offerings

This activity assesses the use of product differentiation in your organisation. Product differentiation is the practice of designing your product / service range to target different customer segments. This helps the use of differential pricing and yield controls by discouraging customers from buying a cheaper product.

1	2	3	4
Business only has one product / service; or product / service range not designed for customer segmentation.	Product / service range designed for customer segmentation. Each offering uses significantly different resources.	Product / service range designed for customer segmentation. Different offerings are made up of pre-existing offerings.	Product / service range designed for customer segmentation. Many offerings use the same physical resources.

Current practice

- Room classes are the main way of segmenting customers. They often require different resources and are generally locked-in by building design.
- Room differences are used to target different market types. Some managers introduce policies to further segment the market using the same set of rooms.
- Around the network, there is a growing focus on limiting the number of room types.
- Evidence found of bundling existing product into different offerings. This provides another way to segment customers.
- Methods chosen for product bundling promotes loyalty at relatively little added cost to the organisation.
- Some evidence found of bundling add-on services. This is mainly amenities for purchase and travel agent contracts.

Duration

This activity assesses the use of duration control in your organisation. Duration control is the practice of managing the time taken (overall time and variation in time) to create a product or serve a customer. This helps the use of differential pricing and yield controls by making customers more predictable. It also helps to increase the number of customers that can be served by your organisation.

1	2	3	4
Duration control is not actively managed or focuses on entire processes.	Duration control focuses on bottleneck activities. The aim is to reduce total duration.	Operating procedures vary between busy and slow periods. Informal guides are used. Only internal activities are managed.	Operating procedures vary between busy and slow periods. Formal standards are set. Both internal and external activities are managed.

Current practice

- Properties share independently developed best-practices across the network to help improve processes.
- A trend of shorter booking windows makes it difficult to forecast.
- A maximum length of stay policy is used to encourage movement through network and to prevent bad customer habits.

Demand analysis

This activity assesses the methods used in analysing demand in your organisation. Analytical revenue management relies on statistical or mathematical models to understand customer demand. This helps in detecting patterns in demand to inform pricing, yield controls, product offerings, and duration.

1	2	3	4
No active demand analysis; or demand analysis uses intuition informed by experience.	Demand analysis uses intuition informed by general management information systems.	Demand analysis blends intuition and formulaic approaches. This is informed by a range of information sources.	Demand analysis uses statistical models informed by specifically collected information.

Current practice

- Comparisons within property are the main way of assessing performance. There is some use of visualisations and trend tracking.
- Some evidence found of analysis to understand demand influences. This is complicated by the variance in competitors and instability of the market.
- Ongoing revenue management analysis is done by front-line managers, with varying degrees of sophistication.
- Head office analysis focuses on bigger picture issues rather than determining site activity.
- Managers are examining ways to use computer support for analysis and data presentation.
- For some areas, human analysis is favoured due to the problem's complexity and the cost of computerized analysis.
- A lack of formulaic analysis sometimes limits revenue management analysis. However, it is difficult to justify additional investment.

Data types

This activity assesses the types of demand data collected by your organisation. Analytical revenue management relies on in-depth records of historical trends. Recording trade details, operating performance, and customer characteristics for individual transactions enriches demand analysis.

1	2	3	4
Demand data is not actively recorded. Transactions are recorded for compliance or cost control reasons.	Demand data is recorded but is highly aggregated. Only summaries are kept, combining a number of transactions.	Basic demand data is recorded for every transaction. Data provides tactical information.	Extensive demand data is recorded for every transaction. Data provides strategic information and helps improve revenue management systems.

Current practice

- Data is captured at the individual transaction level. However, managers work with aggregated summaries when conducting analysis.
- The same data set is combined and configured in many ways to match the managerial level.
- Reports must be complemented with managerial understanding as they do not always contain explanations of results.
- External reports are used to help understand customer and industry behaviour.

Data collection

This activity assesses the way demand data is collected in your organisation. Analytical revenue management relies on accurate records of historical trends. Regular collection of transactional, competitive, and environmental demand data improves accuracy in demand analysis.

1	2	3	4
Demand data is not collected. Experience and familiarity are the only sources of historical records.	Demand data is collected manually but only infrequently or for one-off projects.	Demand data is collected manually and regularly.	Demand data is regularly collected using automated systems.

Current practice

- Ongoing operations are captured using integrated information systems. This is focused on internal transactions.
- Simplifications and errors reduce the information content of transaction records.
- Plans are underway to reduce manual interfacing needed for operations and analysis.
- Manager observation is the main way of capturing demand indicators. There is some use of external reports and surveys.
- There is currently some disconnect between staff in charge of data management and staff who use the data. Initiatives are in place to provide better alignment.

BigStay – Appendix 1: Interview summary

Pricing

Prices vary by room type and services used. This incorporates resource variation and reflects different customer needs.

- Prices vary across product types. For example: multi-share rooms, private rooms, en suite facilities, and number of guests in a room.
    - This variation helps create lead-in prices to attract customers.
    - For example, the "headline" price is for a shared dorm room. Customers are attracted to this low price but may then choose a private room after considering all options: "you attract people with a low lead-in price, but they often end up booking a more expensive product anyway."
    - Quantity discounts are also offered by way of a bulk bed product.
    - Property-level managers may also lower prices for longer stays to reflect differences in costs to serve.

- Services are priced on a per-use basis. They are not built into room rate.
    - Examples include in-property shops, internet, laundry, and locker facilities.
    - These are priced in acknowledgement of the convenience they offer: "If a customer doesn't want to walk to the supermarket, then I think he should be prepared to pay the price [we charge]."

- Costs constrain pricing but it is difficult to calculate the marginal cost of an additional bed.
    - One manager comments: "A big challenge in accommodation is weighing up the average cost of a bed sold versus the incremental cost of selling one more bed."
    - Several estimates have been made of marginal costs:
        - "A very rough estimate is that it costs us about $17 on average for every bed that we do sell."
        - "We think if we sell one more bed and you apply variable cost to that extra bed, that one bed that would have otherwise gone unsold maybe costs us, let's say, $5"

Pricing incorporates differences among customer groups. This is mainly done using different room types.

- Managers identify recurring customer groups to determine the types of rooms to offer.
    - Examples include special events, tour companies, and school groups.
    - Different groups have different directional effects on pricing.
        - Private rooms are promoted for premium events: "for instance, World of Wearable Arts happens here in September… those rooms will sit at a plus ten rate because they're at a premium peak time."
        - Family rooms are promoted for holiday periods: "When we look at say school holidays, yes we're attracting those families, but we're often actually coming down to bring them in."
    - Certain customer demographics (e.g. gender) are not used as pricing bases.

- Members and groups are the most formally distinguished customer groups.
    - Network-wide policies guide the pricing and services provided for these groups.
    - For example, members receive a discount on accommodation within the network.
    - For example, groups are charged a membership fee which offers booking privileges and access to a group coordinator.

Competition guides pricing decisions. The goal is to price according to intended strategic position, not to match competitors.

- Strong competition restricts price setting.
    - For example, one manager observed that a $3 to $4 premium over other properties resulted in very low occupancy at the site. However, they were able to maintain customer numbers with a $1 to $2 premium in the same market.
    - One manager comments about the effect of competition: "Essentially the margin on budget accommodation just continues to get thinner and thinner. And with the additional capacity that comes into the market, there doesn't look like there's going to be any relief anytime soon from the constraints on pricing."

- The goal is to attain a relativity of prices towards competitors.
    - One manager comments that the objective is not to undercut competitor prices as prices reflect value. Too low a price can reduce the perceived value of a stay.
    - A range of competitor types have different influences on pricing.

- Hotels had previously served a different competitive market but some have moved in on the budget-accommodation market.
    - Hotel prices are around $15 more than equivalent rooms but are still tempting upgrades for customers.
    - This places a ceiling on prices: "We've found this year for example, particularly in Christchurch, that our strongest competition is probably the hotels where they're coming down to meet our prices. That's been putting pressure on pricing."
    - This change is attributed to the recession at the time.

- Budget-accommodation chains are the preferred benchmark.
    - Two other competitors have staff specifically involved in managing prices.
    - One manager comments: "When we compare prices, we tend to compare against larger operators who are in a position like us to have staff actually managing pricing."

- There is a smaller effect from independent budget-accommodation providers.
    - Without dedicated staff, pricing is not as great a focus for these smaller businesses.
    - "A lot of them are busy changing beds, trying to run the front desk, pick up the phone, go and get their kids from school, and do everything else. So they often aren't in the same position to be managing their pricing every day because they've just got other business imperatives."

Pricing decisions are decentralised and made at the property-level.

- Ongoing pricing is decided by property-level managers with area manager approval.

    - Area managers have formal authority to set prices but rely on property-level managers to inform pricing.
    - One manager comments: "I've learnt pretty quickly that the guys in the locations that we've got, the [property-level] managers, are *really* in tune with their market – what's going on, what their competitors are doing – so I leave them to drive me."
    - Prices are accepted after an interrogation process: "I'll question them and I'll play devil's advocate and ask them 'what about this? What if we were to do this?' And their answers are usually pretty spot on, which gives me great confidence."
    - This reflects a culture of staff empowerment.
    - This reflects their greater understanding of regional activity.

- There are few head office policies and promotions which influence pricing freedom.
    - Managers are free to operate within a pricing band prescribed by top management. This pricing band dictates a minimum price, a maximum price, and authorises small tactical shifts in pricing.
    - One manager comments: "We make the range big enough that it'd be highly unlikely that anyone would ever get outside that range anyway. We leave plenty of headroom for people to price up a thing or two if they can."

- Nationwide policy, promotions and contracting activity constrain regular pricing. This can result in some properties receiving a lower price but is seen to offset across the network.
    - Company culture: "We've made a position for ourselves that we don't really gouge customers. We don't go to a 100 percent mark-up on pricing. We try and keep our prices connected to what our normal prices are when there's a premium event."
    - Contract pricing: head office regularly negotiates standard prices with travel agencies and tourist promotions.
    - Bulk beds: a promotion where customers buy vouchers for several nights' stay. These vouchers can be used across the network.
        - Standard prices should therefore sit above these prices: "We want our rate to sit high enough above that so it makes it very attractive to buy the vouchers. We certainly don't want to sit below our discount tool because obviously that would look silly."
    - Non-profit objectives: promotions are also run with a view of promoting other non-profit objectives such as sustainability objectives, i.e. social and environmental concern.

- One manager comments that this is in contrast with other organisations which impose "very tight" rules around pricing.
    - He recounts that all price changes and discount requests needed to be approved by the head office.

Pricing responsibility has changed over time from head office pricing to front line empowerment.

- Historically, prices were set for the year and were approved by a board of directors. This structured pricing did not adjust to changes in competitor and customers.
    - This was partly attributed to the organisation's focus on benefitting members.

- This also matched industry pricing trends: “in the past your rates were sort of published in the Lonely Planet and on a brochure and they stayed like that for a year”.

- Growing market competition and new technology triggered the need to change.
  - New Zealand is seen as an extremely competitive market: “It’s quite easy to see. If you compare similar locations in New Zealand on [aggregator website] to, say, some Australian locations we have huge numbers of properties in some very small destinations.”
  - One manager comments on the influence of technology: “It’s how the market has changed, because the market no longer carry a book that they expect you to be the same as that published rate. They carry a laptop or a mobile phone.”
  - Third party aggregator websites have also created greater visibility in pricing and a need to be responsive to competition.
    - “By the time those guys [aggregator websites] came in, pricing visibility was becoming much more transparent. You could see it all on the web; you can compare us with other people and so on. You couldn’t afford to simply sit there and not move your prices while competitors were moving their prices.”

- Decentralised pricing helps incorporate a range of demand factors.
  - Competitive position: “There are all sorts of variables [in pricing] but it is very competition driven. We have to stay in the market.”
    - One manager comments: “We don’t necessarily want to be the cheapest in town. Actually, we don’t. We want to sit where our facilities and our reputation say we should.”
  - Customer characteristics:
    - One manager comments that board-based decision-making no longer matches their modern customer mx: “The members who are involved in governance are not representative of the kind of people we have in our properties anymore.”
  - Regional differences:
    - One manager comments that a ‘fluid’ system is valuable to account for differences across locations.

- Pricing structures continue to evolve in order to meet industry trends.
  - One manager comments: “The upcoming challenge for [us] is to look at ways of reconfiguring the business offering, product development, or something along those lines which allows us to price in a different way. We haven’t met that challenge yet but that is in front of us.”

Yield controls

Yield management is used to maximize revenue from highly variable customer volume.

- Guest numbers vary significantly across the year.
  - One manager comments: "We really only make money in about 4 or 5 months of the year. The rest of the year, it's a sort of holding pattern."

- Thus, the objective is to maximize yield on definite sales and salvage some value from otherwise unsold capacity.
  - This is mainly achieved by applying a premium or discount around a base rate.
  - A longer term solution is to adjust network capacity. For example, adding more beds to existing properties or building new properties.
  - Unused capacity can also be leveraged through promotions. One example is a free night offer with membership: "Basically what we're doing is leveraging our unsold capacity as a marketing/sales promotion tool"
    - "We launched it as a strictly off-season promotion. So it started around Easter time and it finished around November. You could redeem your free night voucher up until the end of December. We kept it out of our real peak months."

Current yield management revolves around customer groups and room types. A "10-5" pricing structure has been implemented nationwide.

- Yield management focuses on different customer groups and events.
  - Examples of groups: school holidays, skiers, international tourists, and travellers with a higher budget.
  - Examples of events: Wellington Sevens, World of Wearable Arts, concerts, and competitions.
  - Changes may be done to individual room types (e.g. private rooms during premium events) or across the entire property (e.g. during ski season).
  - Business characteristics limit the types of actions possible. For example, capacity is out of manager control and room mix is determined by the building's design.

- A 10-5 system has been introduced nationwide to assist structured yield controls.
  - This system allows 5 or 10 percent discounts or premiums across the network. Managers use the structure to adjust daily pricing depending on occupancy and upcoming events.
  - It is also used in negotiations to adjust to individual differences in willingness to pay.
    - For example: "If you've got a young staff member on the front desk and someone says 'well I don't think I'll stay' – and they've been told you need to try and get everyone through the door that you can – then they could say without fear of being in trouble 'hey look I can offer you a 5 percent discount'."
  - This is the "tightest bit of structure" for revenue management at the organisation.

- Some properties introduce their own systems for yield management.
    - One manager comments: "Not every manager uses that [10-5] system, but they all operate in that kind of model."
    - One example found was a price matrix approach (BigStay – Appendix 2). This is a table outlining the prices that can be offered for each room type depending on the time of day and the number of rooms remaining.

Yield is managed at a property-level with some regional oversight. Most properties rely on manager observations rather than a formulaic approach.

- These decisions are made using manager judgment. There are very few official guides used throughout the network.
    - Area managers authorize changes: "If it's a fairly conservative price change, that will probably be rubber stamped. If someone wants to put in a $10 bed there will be a little bit of 'please explain' going on."
    - Managers consider decentralization important. This is because every location is seen as different.

- Changes may be pre-planned at the start of the year.
    - One manager comments: "We know that we needed more family rooms for this period because we always need more family rooms during the school holiday."

- Changes may be made in reaction to daily activity.
    - One manager comments: "If we look empty on a summer's day then we cut our pricing only to find that midday things have changed considerably; then we'll move our pricing [again]."
    - Some properties can take advantage of predictable local patterns when doing this.
        - One manager comments: "we know that pretty much the transport providers arrive between 4 and 8 o'clock at night. It really makes it quite easy for us to determine, through our front desk guys, 'tonight, let's focus on this room type; let's throw this price out there as a walk-in rate'. So we can be quite reactive."
    - This sometimes relies on front counter staff and may require customer negotiation.

- National promotions can reduce prices at certain locations.
    - For example, the bulk beds promotion: "There are locations, particularly during ski season, where bulk beds could be deemed as reducing our yield. We generally win as a network. Some locations on any given night may experience a loss."

Practices have evolved over time. Historically, prices were set at the start of the year and did not change according to actual demand.

- Previously, the organisation did not have a formal structure for yield management.
    - Prices were static. They were set and released on a scheduled basis, with a peak season rate and a low season rate with one or two scheduled changes. Other than that, scheduled prices were largely unchanged.

- Over time, this changed towards a more responsive approach to yield management.
    - [Overseas associate A] was implementing changes to align pricing with demand. Managers brought the concept to the organisation.
    - Initially, there was a "bit of resistance" to the concept. Managers were not used to the idea of a premium asking 'how can you morally do this?'
    - There was a need to shift the existing paradigm – that it was good business to link prices with demand.

- Yield management has evolved at the organisation to be more responsive.
    - There is now an understanding that customers accept a price premium during high seasons.
    - Managers are encouraged to investigate better ways of managing yield: "It's really important that we discuss these things on a regular basis. It's not a chore. It's really part of our culture and endemic to what we do."
    - The network structure has helped transfer 'best practice knowledge' to other properties.

- Resource requirements have delayed the development of new techniques.
    - One manager comments that it is difficult to commit resources to developing yield management systems given the organisation's strategy. An improved system would be "nice to have", rather than necessary for successful competition.
    - A similar situation is found in smaller operators: "They often aren't in the same position to be managing their pricing every day because they've just got other business imperatives."

Competition and technology triggered this need to re-evaluate yield management.

- Increased competition has affected yield and occupancy. This is compounded by the visibility offered by the internet and other information technology.
    - Competition has intensified from growth in sector-wide capacity and recessionary trends.
    - Aggregator websites and search tools have made it easier for customers to search for promotions and compare prices.
    - Refer to Pricing section for more discussion.

- These trends have also led to customers booking at shorter notice in hopes of a bargain price.
    - Thus, yield controls have to be applied reactively.
    - One manager comments that yield controls are difficult to apply ahead of time due to short booking windows. He contrasts this to the airlines who have longer booking patterns and so can offer discounts earlier.
    - However, managers are warned to avoid practices which encourage short booking lead times: "The tension is that you don't want to either create a customer habit or create a customer expectation of continuous discounting on your unsold inventory."
    - Refer to Duration section for more discussion.

- Yield controls have helped offset the yield lost from competitor activity.

- One manager comments: “We’ve been very fortunate in that we’ve been largely able to offset our occupancy declines by increasing our yield.”
- Another indicator of performance is exceeding budget expectations. One manager explains that last year, the organisation exceeded the budget’s estimated average rate. This is attributed to the strengthening revenue management culture in the organisation and increased manager confidence in applying revenue management.

Product offerings

Room classes are the main way of segmenting customers. They often require different resources and are generally locked-in by building design.

- Many room types exist which vary along several dimensions:
  - Privacy: multi-share or private room
  - Number of guests: 1 to 10
  - Facilities: en suite or shared bathrooms
  - Location: some cities have several properties

- Available rooms are mostly determined by building design.
  - One manager comments: "We can do a little bit of juggling, like we can sell twins as kind of two-shares if we wanted to."
  - This influences the average price achievable: "[Property A] is probably the highest, or is the highest, yielding property because it has a much higher proportion of private en suited rooms that we can charge more for."
  - Some properties are not purpose built, e.g. farmhouses or schoolhouses.

Room differences are used to target different market types. Some managers introduce policies to further segment the market using the same set of rooms.

- Standard product offerings can sometimes serve different customer segments. This is done by changing the room's designated product type.
  - Room-configurations are re-evaluated yearly.
    - One manager comments: "we've identified that we need more singles and then we identify we needed more triple rooms. So through that we developed our product offering".
  - Large multi-share rooms can be single-gender or mixed.
  - Smaller rooms can be used as multi-shares or private family rooms.
    - One manager comments on one such reconfiguration: "That's identified that our market, for those two weeks, is highly family driven. We've put more family rooms into the property for two weeks"
  - Event crowds are served using standard rooms even though different marketing is used to attract them.
  - Some product differentiation dimensions are not used as they are considered unfair.
    - For example, one manager comments that they do not charge different prices for gender as it is considered unfair.

- This product variation is seen as an effective way of segmenting customers.
  - One manager comments that it is important to "pitch yourself at different positions" as this helps you serve a wider customer base.
  - This facilitates upselling. For example, lead prices ($18 beds) are used to attract customers in anticipation of them eventually buying a more expensive option.

- Some product offerings are created for non-profit objectives rather than for customer segmentation.

Around the network, there is a growing focus on limiting the number of room types.

- Too many room types complicate ongoing operations.
    - Fewer room types give flexibility when assigning customers to rooms: "All the talk from a PMS [property management system] was that you wanted 10 to 12 room types and no more. Because more than that and it became a little too complicated with bed moves."
    - One manager comments: "The best fluidity that you get from a system is keeping a low number of room types so you've got maximum number of beds across a minimum number of room types."
    - There have been efforts to standardize the number of product types: "So in a property where, let's say, we had one 4 bed, one 5 bed, one 6 bed, one 7 bed; yeah, no. We're trying to standardize where we've got a couple of 4s and a couple of 6s."

- Building features may warrant a larger size room: "they have a sort of charm to them rather than just being a square room with as many beds packed in as possible".
    - One manager explains: "We have a couple of locations where the 10 bedroom actually has something special about it. So for instance, [Property B] has a 10 bed but it's an old chapel. So it has beautiful big windows and is quite a stunning room."

- This change is also in response to changing market preferences.
    - One manager comments about the organisation-wide trend: "We've got very, very few dorms bigger than a 6. It's what the market wanted two years ago. It's actually given us a key selling point at the moment. With prices coming down, people are using, certainly our competitors, are using their 12 bed rooms as their lead in price. We can offer a little bit more comfort with our lead in price."

Evidence found of bundling existing product into different offerings. This provides another way to segment customers.

- Practices mainly revolve around loyalty, with some targeted towards other organizational objectives.
    - Products include memberships, free night promotion, bulk bed vouchers, and discounted long stays.

- Memberships provide a way of segmenting customers, encouraging stays, and promoting organizational objectives.
    - Segments customers and promotes loyalty: "If we can sell someone a [company] membership that does somewhat predetermine their future booking and buying habit."
        - Members receive a discount on room rates and discounts at a range of affiliates.
    - Promote organizational goals: "It might be more compelling for people to join an organisation which is committed to young people developing an understanding of the world through travel."

- A new membership promotion gives new sign-ups a voucher for one night's stay.
    - At the time of interview, this was tested during peak seasons: "For the first time, we ran that free night promotion right through the summer."
        - This was in response to market competition: "It was essentially a way of looking at ensuring customer retention in the network. It is a response to the more competitive environment rather than just going [and] discounting beds."

- The bulk beds promotion bundles several bed nights across the network into a product.
    - Guests can buy open-dated accommodation vouchers across the network. These are sold in books of 5 or 10 nights. They are sold at a discount price.
    - One manager comments that this is difficult to emulate by competitors: "They don't have a network. It doesn't have the same effectiveness. They can't coordinate a network of properties to give away a free night whereas we can."

- Some managers offer a discount on guests staying for one week. This is usually limited to off-peak seasons.
    - This offers several benefits: the customer is encouraged to stay longer; operation costs are reduced as servicing is less frequent; and long-stay customers have higher ancillary spending.

Methods chosen for product bundling promotes loyalty at relatively little added cost to the organisation.

- Relatively low marginal costs of a sale means that many of these promotions are relatively inexpensive. Additionally, these costs are usually offset by other savings and revenue earned.
    - One manager comments on this: "So if you think about what is actually involved that you wouldn't have used, the only real thing is the laundry – the additional laundry – a tiny bit of water for the person having a shower."
    - Membership is cheap to supply but earns a substantial fee: "While it costs someone [a price] to buy a membership, it doesn't cost us [that much] to sell one. So membership is actually one of our highest margin products.
    - Initiatives are in place to reduce processing costs for memberships.
    - Opportunity costs for the free night promotion are relatively low as the membership fee offsets the price of the free bed: "I think we have been able to offset some of the bed revenue lost with membership sales gains. That's probably an additional benefit which we're happy to take."
    - Bulk beds provide up-front cash flow and have the side-benefit of non-redemption savings.

- Particular national promotions affect properties differently.
    - For example, guests can buy bulk vouchers for use in more expensive properties. The price for each voucher is the same and can be used at any property in the network.
    - There is sometimes manager push-back from specific locations.
        - One manager comments: "There are locations, particularly during ski season, where bulk beds could be deemed as reducing our yield."
        - However, the network benefit is seen to exceed the short-term effect on individual properties: "But again, that's only at certain times of the year. I

think the managers in those locations get a little bit too focused on maybe a two week period."

- All promotions are reviewed by several departments to assess feasibility.
    - This is primarily done among sales, marketing, and operations departments.

Some evidence found of bundling add-on services. This is mainly amenities for purchase and travel agent contracts.

- All properties offer standard amenities which guests can purchase.
    - Groceries and toiletries: milk, cereal, toothbrushes, snacks, and drinks.
    - Other services: locker facility, laundry, and internet.
    - Some properties offer meal promotions: fish & chip night.

- Some examples found of added services or packages involving more than just accommodation.
    - Guests can book local attractions at the service desk.
    - Groups are offered a consultant to manage the booking.
    - Events are sometimes organised at different properties. For example, one promotion offered 50 percent discount on accommodation one weekend where they've organised events, meals, and discounts at local attractions.

- Demand for product packages is reduced due to the internet.
    - One manager comments that "customers are a lot more internet savvy and they're making their own arrangements over websites and things rather than us selling them."
    - Accordingly, package sales are largely for international markets. These include accommodation, transport, transfers, and activities.
        - "We largely sell them to an offshore market. We largely sell them direct off our own website or out of our own brochures. Things like that. That's what we also offer to the agent market."

Duration

Properties share independently developed best-practices across the network to help improve processes.

- These are primarily aimed towards improving operations rather than necessarily towards revenue management.
    - Some properties provide a guest information sheet of policies and facilities to reduce the amount of staff explanation needed when serving a guest.

- There is limited variation in processes across properties despite the differences in the physical site.
    - One manager comments: "They all have to meet a certain cleanliness standard/facility standard. They operate the same check-in/check-out procedures, the same reservation system. There are very few things that are actually different despite the fact that the buildings can look quite different."

A trend of shorter booking windows makes it difficult to forecast.

- Managers comment that, nowadays, customers make bookings with shorter notice.
    - For example: "We've noticed changes in the way people are booking. They tend to book on short notice rather than booking well ahead the way they might have previously."

- Some policies are in place to improve customer stability in the network but do not appear to address this trend of short booking windows.
    - Bulk beds helps ensure customers return to the network.
    - Cancellation and refund terms vary by the time of cancellation.
    - To encourage stay within the network, bookings can be transferred between properties at no extra charge.

A maximum length of stay policy is used to encourage movement through the network and to prevent bad customer habits.

- Organisational policy is a 7 day maximum stay. This is viewed as a recommendation rather than a rule.
    - Customers can extend their stay and this is reviewed on a case-by-case basis.
    - Shorter stays help improve movement throughout the network.
        - One manager comments: "Long term accommodation means that people aren't moving on. So they're not going to the next [in the chain]."
    - Long stays take up rooms which may be needed to serve other guests.
        - One manager comments: "We are a 10 night maximum stay in [Property C] in multi-share only because of our need for our multi-shares for our groups market."
    - Properties are also not configured towards long stays.
        - One manager comments that other businesses are better suited to long-term customers: "They have large numbers of quite small single rooms so they're

really good for long term accommodation. Our property is better suited for travelling and that's what we do best."

        - Another manager comments that long-stayers tended to expect a discount and were more likely to start acting inappropriately.

- Properties enforce maximum lengths of stay to varying extents.
    - One manager comments this is particularly the case in slower seasons: "At this time of the year, you'll never find people objecting to people staying more than 6 nights in a bed; "you want 20 nights? Lovely!"
    - Additionally, longer stays require less cleaning and tend to result in higher ancillary spending.

Demand analysis

Comparisons within property are the main way of assessing performance. There is some use of visualisations and trend tracking.

- The main form of analysis is comparisons against budgets and historical results. Percentages are the main figure used in comparisons.
    - One manager comments: "When you're measuring the performance of a property you tend to measure it against itself. So when you're looking at yield or occupancy, you're looking against its figures from the year before, and the year before that, and the year before that."
    - Head office provides a rough budget guide: "That's a mechanistic forecast. It's basically taken the year to date and adding the budget for the remaining months. It's not a real forecast, but it's just an indication of what the out-turn [results] might be relative to the budget."
    - A management-by-exception approach is used to find where closer investigation is needed: "When there're negatives in there [results compared to budget], that's the property that we need to be looking at."

- Analysis focuses on historical data due to difficulty in forecasting.
    - Comparisons to prior year figures are done for nationalities, booking channels, reservations, and walk-in numbers.

- Comparisons between properties are deemphasised due to difficulty in doing so.
    - One manager comments: "You're not going to compare [between regions] because they're two completely different sized properties and it's too hard. It's just too hard."

- Tables are the main basis of analysis, but graphs are sometimes used to help find trends.
    - Graphs are made to inform special reports and are used as part of ongoing financial reporting.
    - For example, to find direction trends or "lumpy" behaviour – big jumps in occupancy between months.
    - However, one manager comments about the limitations of visualisations: "The trends aren't particularly marked and depending on the scale of the graph, yeah it's hard to actually sort of depict graphically. Which is why we want to start looking at a page for each of the topics so that we can actually get a better scale."

Some evidence found of analysis to understand demand influences. This is complicated by the variance in competitors and instability of the market.

- Property-level managers focus on the market standard price – the average price charged by competitors.
    - This is informed by aggregator websites such as wotif.com.

- Some review of industry behaviour.

    - To find market share: “We’re looking at market capacity in the whole of the market. This information comes from Statistics New Zealand. Then we’re plotting our share against that.”
    - To assess growth in competition: “I’ve got a graph up here I can show you… so [accommodation industry] daily capacity and occupancy. The red line there is the performance of industry average annual occupancy

- Some review of customer make-up.
    - Demographic data (e.g. age and country of origin) is collected for all reservations.
    - Guest surveys have helped understand demand influences, although they have not asked customers about their generally accepted price points.

Ongoing revenue management analysis is done by front-line managers, with varying degrees of sophistication.

- Property-level managers perform their own analysis using data on their own property.
    - Prices manipulated are at the property-level according to short term trends: “We manipulate prices on a daily basis at the property-level based on events, major spikes in demand, or conversely where we’re trying to fill a property at the end of the day”

- Analysis differs in the degree of rigour. However, conceptually, the same factors and decisions are being analysed in each property.
    - Some managers use formulaic approaches in analysis.
    - For example, the Price Matrix approach found at one property. This provides a structured way of integrating a number of factors in analysis. Factors include time of day, occupancy level, and room type.
    - One area manager comments that he can use “same thinking” to review each property’s business plans even though they differ in terms of analysis. He allows managers with more experience to select their own tactics.

- Not all analysis is done for revenue management decisions. Some analysis is done to ensure smooth operations.
    - For example, an auditing report is used to check which customers have paid in full.

Head office analysis focuses on bigger picture issues rather than determining site activity.

- There is limited oversight of the ongoing revenue management process from the head office.
    - One manager comments that centralised revenue management is not appropriate at the organisation. This is due to the very diverse environments the organisation operates in.
    - National managers comment that they did not have a detailed understanding of the specific types of analysis that takes place in properties or the frequency of price changes.
    - Head office managers rely on the area manager structure to check property-level decision making. They receive summaries of general trends from information systems and reports from area managers.

- Head office level analysis focuses on comparisons across settings and activities. These are generally deemphasized at the property-level.
    - Comparing to industry trends: "[this organisation] consistently outperforms industry occupancy by about twenty percentage points."
    - Comparing between properties: "We also produce a benchmark report quarterly. That lists all the properties comparing this year and last year, and against each other so that you can see what the bed yield is for say [Property A] and compare it with all the properties."
    - Comparing between booking channels: "We've also found we can get a bit of a price premium off our own website."
    - Other areas of comparison include associate hotels, customer demographics, and memberships.

Managers are examining ways to use computer support for analysis and data presentation.

- One example is calculating the marginal cost of selling another bed.
    - Computerised analysis is being developed to complement manager intuition and findings from a one-off study.
    - This will inform costing and help assess the profitability of future activity: "I'd like to start looking at marginal costing so that we can actually get better information around what our costs actually are."
    - One manager comments that more work is needed on current attempts at computer analysis: "I don't actually believe it [the output] because, empirically, it's giving us a higher marginal cost per bed in peak season than it does in low season. Now that to me sounds as if it's the wrong way round: that marginal cost of a bed in the peak season is going to be less because you're fully staffed; you've got most of the lights and things running anyway."

- In many cases, the need is for better presentation, rather than about missing data.
    - One manager comments: "I document our advance reservations level at the start of each month in a manager's report. That's useful for me to give me an understanding but it's a failing of our reservation system that I can't historically just go in and have a look and see what it was at any given point in time."
    - One manager comments: "Yes I would like a computer to do all that for me, but we have the information. It's not missing. I just have to do a bit of process work sometimes."

- There are plans to improve demand analysis by improving report formats.
    - Currently, product range configuration is manually investigated after a lot of added managerial effort: "We do laboriously every year go through the process of identifying what our percentage occupancy by room type is."
    - Initiatives are in place to upgrade reporting functionality: "The upgrade that we've just had allows for more reporting functionality. One of the reporting functionalities that we really miss is a percentage occupancy by room type."
    - Refer to Data types and Data collection sections for more discussion.

For some areas, human analysis is favoured due to the problem's complexity and the cost of computerized analysis.

- There is high variability in industry characteristics and customer behaviour. This makes it difficult to capture meaningful indicators of future demand using automated systems.
    - Booking trends: managers generally make limited use of historical demand information because customers generally book with a very short lead time. This reduces the information content of advance bookings.
    - Events: it is difficult to estimate the change caused by events due to differences in the size of the event, their irregular timing, and concurrent events.
    - Customer groups: one manager comments that markets are becoming increasingly fragmented. Hence, seasonality is an outdated term "to when everyone went travelling in summer; and in winter you hibernated".

- Accordingly, managers impose informal structure rather than formal categorization in analysing trends.
    - One manager comments: "We don't formally separate [customer groups]. However we have identified all of those so when we're marketing we go out to specific markets."
    - In many cases, manager expertise is used to explain results which are only broadly captured by formal records.
        - Performance: membership trends; average yield; change in occupancy; and unusual results.
        - Customer behaviour; negotiating prices; booking patterns; segmenting customers; ancillary spending; and price sensitivity.
        - External influences on demand: seasonal effects; economic climate; market pricing; and strength of competitors.

- Manager experience is viewed as more responsive approach and therefore more appropriate in a dynamic environment.
    - One manager comments: "It's really important for us to stay extremely reactive. When you start to formalize something you can get stuck in 'well this is what we do every school holiday' instead of us as a management team going 'right, this year what we're seeing in this market – travellers are down – we need more out of this market, here's how we're going to push this one up.'"
    - Managers are reluctant to "handcuff" staff who are comfortable with negotiating a larger premium or a smaller discount to get customers to stay.

- In stable environments, standardised analysis is considered beneficial.
    - For example, one manager comments about the analysis developed at Overseas Associate B: "all the variables, they've managed to input into this tool that they use. Now, they're very fortunate in that the levels of their advanced reservations are significantly higher than ours".
    - Demand analysis was viewed as simpler when prices were set throughout the year: "everybody knew what their yield was going to be for the year as long as they reached a certain amount of overnights".

A lack of formulaic analysis sometimes limits revenue management analysis. However, it is difficult to justify additional investment.

- One prominent example was analysing the effect of revenue management initiatives.
    - Several managers commented that it is difficult to track the benefit of yield management.
    - Measures used include: average yield; change in booking numbers; higher bookings at a lower price point; and comparisons to budgeted figures.
    - For example, one manager comments: "Touch wood, and I have to say that's probably the level of it, the property-level managers have handled it well. The proof I suppose has been in the pudding which is that we have seen a yield increase as we've done this."
    - Without a direct structure to assess performance, analysis relies on anecdotal evidence and gut feeling.

- Other examples were found where reliance on human analysis simplifies the findings achievable.
    - Size of change: analysis is generally limited to identifying events and the direction of change. For example, the number of additional guests from the Rugby World Cup.
    - Detailed comparisons: particularly detailed comparisons are ignored for being too difficult.
        - For example, assessing location: "Whether they're on a slightly busier street than this, I mean that would just be too much of a nuance to call. I couldn't say this location would be better than that building across the road."
    - Promotions: "I think we have been able to offset some of the bed revenue lost with membership sales gains. That's probably an additional benefit which we're happy to take."
    - Manager bias: one manager comments that relying on manager experience may lead to an unhealthy emphasis on relatively small trends.

- The organisation's strategic focus means that it is difficult to justify upgrading to computerized analysis.
    - One manager comments that existing monitoring and analysis processes are resource intensive: "There's a bit of work that goes through in having to monitor. We're a) creating the targets and b) monitoring the targets or achievement of targets afterwards."
    - One manager comments that computerized yield management systems have greater priority in organisations with a profit maximizing focus.
        - In contrast, the manager comments that the organisation's multi-goal focus means that it is hard to commit resources to developing revenue management.
    - Another explanation is an organisational focus on staff empowerment. This deemphasizes centralized computer analysis.
        - Managers are usually also responsible for day-to-day operations. Hence, they have limited time to explore potential ways to improve performance assessment and revenue management.

Data types

Data is captured at the individual transaction level. However, managers work with aggregated summaries when conducting analysis.

- The reservation and property management system captures all transactions and bookings individually. Some customer demographic data is collected alongside transaction data.
    - Capacity: total bed nights available, number sold, and occupancy percentage.
    - Ancillary services: shops, internet cards, phone cards, and commissions.
    - Operating performance: yield figures and turnover.
    - Costs: total per overnight, utilities costs, and remuneration.
    - Financial performance: return on investment, earnings before interest and tax, and other financial ratios.
    - Customer: country, age, gender, number of nights stayed in, membership, and group versus independent.
    - Sales channel: call center, organisation website, other website, associate properties, and other agents.
    - Promotions: up-take on promotions, and non-redemption rate on vouchers.

- Managers work with summarized data rather than with individual records.
    - Some use of customer data which is captured at the transaction level but this is separated from individual transactions.
        - This focuses mainly on booking channel, nationality, and age profiles.
    - Booking patterns are available but are not used as they are considered uninformative.
        - Managers comment that independent travellers book with a short lead time.
        - However, groups generally book in advance and therefore provide more information.
    - This aggregation reflects the use of human analysis over computerized methods.
    - This aggregation also reflects the business model. A focus on nights stayed means that daily summaries provide all the detail needed. Contrast this to other industries where capacity usage varies throughout the day (e.g. restaurants).

The same data set is combined and configured in many ways to match the managerial level.

- Higher levels of management work with increasingly summarized data.
    - Property-level managers use daily transaction summaries by product type. This is primarily in relation to day-to-day operations.
        - Main indicators: Occupancy, incoming guests, room-type summaries, ancillary sales.
    - Area managers sometimes work with daily information, but often use periodic summaries. This is primarily for performance evaluation.
        - Main indicators: Key financial indicators, budgets, booking channels, and nationalities reports.
        - Cross-property comparisons are available but not generally used.
    - Head office management focuses on big-picture overviews. This is primarily for coordination, overall performance measurement or to inform strategic direction.

        - Main indicators: Standard financial reports (profit & loss, balance sheet, and cash flow), departmental costs.
        - Data is aggregated by month or by year.
        - Cross-property comparisons are available but not generally used.

- Several initiatives are underway to improve access to more detailed data.
    - One manager comments: "We're trying to get it so that we can put a separate story on each page… [gives examples of categories]… rather than having it all in a sort of financial report."
        - These changes aim to provide more detail and more frequent updates, rather than increasing the scope of information.
    - Example – Cost reporting: "We've got a new financial management system that's going to give us almost real time reporting in terms of cost code management. So any point during the month, we'll know what our costs that we've incurred are. Whereas currently we don't."
    - Example – Easier access: "my northern central area P&L is not the same set up as the property P&L… Literally for me, I [currently] have to open six P&Ls. But now I'm able to look at my area and then drill down within the one profit and loss account".

Reports must be complemented with managerial understanding as they do not always contain explanations of results.

- Manager understanding to measure performance and understand results.
    - Assessing performance: managers emphasise different results as the main measure of performance. Examples include occupancy, yield, and return on investment.
    - Unusual results: to acknowledge the effect of building configurations, renovations, and funding structures.
    - Market position: to determine which competitors are most important and understand market prices.

- Manager understanding to revise budget figures and expectations.
    - Search for events: local or national events are considered more appropriate than historical figures when forming expectations.
    - Search for economic climate: indicators of recessionary/boom trends as well as international influences on travel (e.g. trends at Overseas Associate C and the 2012 Olympics).
    - Search for competitor actions: one manager comments that this is of growing importance: "In the past, we've never really had too much of a problem with competition from the hotel industry. But with the recession, prices have dropped into our price range."

- Manager understanding to examine detailed customer and regional trends.
    - Seasonality and markets: each property faces a different mix of customer types. This is only partially reflected in occupancy by room type.
    - Regional trends: one manager comments: "My boss basically is really smart in a way: he doesn't know regional pricing and trends like that, so he passes that on to his area manager structure."

External reports are used to help understand customer and industry behaviour.

- This is mainly used by the marketing department to track a range of demand indicators.
    - Industry occupancy: compared to the organisation; market share; growth in capacity.
    - Seasonality; inflows of tourists; makeup of visitor arrivals; and economic climate.
        - One manager comments: "The Ministry of Tourism collate on nationality, age of visitor arrivals, total visitor arrival, visitor arrival by purpose of travel, and so on and so forth. We're looking at those trends. We're looking at the monthly arrival figures. We can see what's emerging."
    - Buying behaviour: reasons for choosing to stay at a property.
- Several key performance indicators for the organisation and the industry are shown side-by-side for comparison.

Data collection

Ongoing operations are captured using integrated information systems. This is focused on internal transactions.

- Information is collected using a series of interconnected software systems. This is designed to combine data on all aspects of operations.
    - One manager comments: "At the moment, it's very structured that we've got a property management system, a membership system, a finance system that they all talk to one another."
    - Each property works with its own data set. They are then automatically combined into an organisational summary.

- This automation is needed to coordinate the network of properties and booking channels.
    - Price changes: managers change prices on their property management system and a channel management system. This then automatically updates prices across the network and the numerous websites the organisation lists on.
    - Onward bookings: staff are encouraged to help customers looking to book stays at other properties in the network.
    - Booking channels: computer support is needed to collate bookings from many channels.
        - One manager comments on the range of sources: "People can make bookings over the web, they can make them through customer services, they can ring the property, or they can just walk in without a booking, and it will be recorded in."

- The system has developed over time, focusing on adding new functionality and system updates.
    - For example, property management systems were initially used in only a few properties. They have since been rolled out throughout the network.
    - One manager comments that software had to be configured to fit the environment: "The products that are out there tend to come from a hotel market and have been butchered to fit us."
    - The system is regularly reviewed for potential upgrades: "We're going to be trying to develop a central management reporting system using some sort of business intelligence tool."
    - Computerised support is seen as relatively new in the backpacking industry. In particular, it is not needed for small businesses.
        - One manager comments: "For a property that was less than 80 beds, paper and pen system work fine. It's absolutely fine. Anything larger than that and you do need a computer res. system."

Simplifications and errors reduce the information content of transaction records.

- Simplifications are sometimes needed for organizational flexibility. This reduces the information captured on customer demographics and product popularity.
    - Fewer room types make it easier to shift customers between rooms.

    - Shared rooms are only allocated between male only/female only/and mixed for balance and for the booking system. Actual allocations vary during use.
    - Customer gender may be omitted in the booking so that they can be transferred around rooms.

- Properties vary in terms of financial discipline and processing time.
    - One manager comments this problem occurs during busy periods: "The staff struggle with the volumes and with maybe the finance disciplines we want to put in place."
    - This requires additional follow-up and can potentially delay decision making.

Plans are underway to reduce manual interfacing needed for operations and analysis.

- A new membership system is under development to improve recordkeeping and processing time
    - The aim is to move away from current paper based systems. The current approach requires a lot of manual input which is resource intensive and sometimes slow.
    - One manager comments on the benefits: "It will make things easier for the people selling memberships and to be able to issue memberships and record the data. I'll also be getting better financial information from that system."

- Greater report flexibility is being examined. Currently, managers need to manually reconfigure reports to obtain what they consider standard information.
    - Refer to Data analysis and Data types sections for more discussion.

Manager observation is the main way of capturing demand indicators. There is some use of external reports and surveys.

- Observations may be active or passive. Findings are not always recorded for future reference.
    - Active observation: comparing competitor pricing; and updates on community events.
    - Passive observation: common customer types; ad hoc feedback; on-job reviews; and voluntary guest feedback forms.
    - One manager provides an example of ad hoc feedback.
        - "I sat outside a couple of days ago and talked to one of the guests who's travelling with her younger son. She hadn't considered staying in [budget accommodation] before and she came here. She was talking sustainability and recycling and said 'you're so far ahead of what I've seen in hotels that this is the kind of place I want to stay.' She was making the choice to stay here rather than stay at a hotel."

- External sources capture industry trends and presents summarized findings.
    - Web booking engines: average room rates in the area.
    - Industry sources: Commercial Accommodation Monitor; Statistics New Zealand reports; international visitor arrivals from airports.
    - One manager comments that this is unique to the tourist industry: "The tourism data sets are actually pretty good. If you were in any other sector – [for example, the retail industry] – there's just not the same amount of rich, primary data out there."
- Some use of surveys to understand customer behaviour.

- A survey was previously administered on a yearly basis. This captured information on reasons for staying and effect of membership on network loyalty.
- "This was the guest surveys which we have run in peak season up until 2008 based on a census style survey at the property; paper based, everyone in house over a certain number of nights."
- Findings from research by associates: "[Overseas Associate B] did a study on the aspects of why people stay in properties. It's for the kitchen: that community feeling in the kitchen."

- Inter-hierarchy and inter- property communication helps spread independent findings across network.
  - Bottom up: properties provide monthly reports to area managers. This includes performance reports, budgets, and business plans.
  - Top down: formalized communications are issued from head office.
    - Financial reports: key financial indicators and benchmarking figures.
    - Network bulletin: general communication and upcoming promotions.
  - Within level: particularly from northern to southern properties. This matches the general flow of tourists.
  - Across organisation: Overseas Associate C provides general guidance on upcoming trends: "We also have a barometer in that we have a good relationship with [Overseas Associate C]."

There is currently some disconnect between staff in charge of data management and staff who use the data. Initiatives are in place to provide better alignment.

- Information infrastructure is currently managed by staff who are not involved in day-to-day business operations.
  - At present, information to be recorded must be sent to the finance department for processing.
  - Operations staff rely on the finance department for record-keeping: "They have to be in at the beginning so they can create their codes or anything they need in that financial system for their accounting."
  - However, apart from coordination and combining reports, the manager in charge of information infrastructure does not use it for business decision making.
  - One manager comments: "Because then, after we've run our cool promo, we're going to turn around to finance and go 'give us a report!' Tell us how well it went!' And they're like 'well you didn't tell us to do it in the first place so we can't count it for you.' You need everybody in there from the beginning."

- This disconnect is a result of the growing role of reports towards management functionality rather than financial control.
  - For example, financial managers are concerned with the timing of payments and inventory valuation.
  - In contrast, operations managers require detailed information on promotions and specific customer types.
  - There is sometimes difficulty in accessing certain information. Refer to Data types section for more discussion.

- Responsibility for the report is now being pushed out to relevant functional areas.
    - The focus is on “devolving the responsibility for separate areas of the report.”
    - Property-level managers and other functional departments will directly input information into a centralized reporting system. This will combine data from many sources into one report.
    - One manager comments on the benefits: “It’s much better connectedness between our finance department and a property-level department. So we can actually get the information we need from the finance department, rather than just getting one report a month.”

BigStay – Appendix 2: Price matrix approach

Property-level managers are encouraged to develop their own approaches to revenue management. One manager has developed a price matrix approach to help structure price changes according to the time of day and number of beds available. This offers a way of systematically integrating time, occupancy, capacity, and yield when changing prices. It is designed to complement the 10-5 structure used throughout the network. Figure 2 shows a sample matrix.

Figure 4: Price matrix

Time	Room type	Beds remaining		
		10-15 beds	15-20 beds	20 beds +
4pm – 7pm	4 share	Base	- $2	- $4
7pm – 10 pm	4 share	- $1	- $3	- $5
10 pm – 12 am	4 share	- $2	- $4	- $6

This table shows the prices to charge at various time and occupancy combinations. For example, at 5pm, if there are 15 beds left for the 4 share, guests can be offered a $2 discount off the base rate. If it is 11:30pm and there are still 15 beds left, guests can be offered a $4 discount off the base rate.

Discounts are therefore given on two dimensions. First, the number of beds left: the higher the remaining capacity, the cheaper the room rate. Second, the time of day: the closer it is to midnight, the cheaper the room rate. The price drops by $1 per time band and by $2 per capacity band.

REVENUE MANAGEMENT

Review of current practices

MediumStay

Executive summary

This report assesses revenue management practices at *MediumStay* based on interviews with managers and publicly available data. We classify the business's revenue management as *balanced*. That is, demand-management and resource-management are informed by a combination of manager experience and analytical outputs with formal data collection. This reflects the organisational structure and business strategy. A detailed summary of the interviews grouped by theme is also presented.

Overview

We classify your organisation as having *balanced* revenue management:

Experience-based		Balanced		Analytical
1	2	3	4	5

Balanced businesses make profit focused decisions using a mix of manager experience and analytical outputs. Pricing and product/service availability are reviewed regularly, with adjustments made depending on how busy the business is expected to be. Revenue management decisions are made using manager judgement, informed by a review of historical trends and his/her expectations about future trends.

Approach

We use a two-stage process to classify revenue management in your organisation:

1. We evaluated the extent to which you employed seven key activities of revenue management.
2. Scores are fed into a decision tree to classify your organisation's revenue management.

Activity scores

Demand-management

Pricing 3

Yield controls 3

Resource-management

Product offerings 3

Duration 3

Analysis

Demand analysis 3

Data types 2

Data collection 2

Figure 5: Revenue management at MediumStay

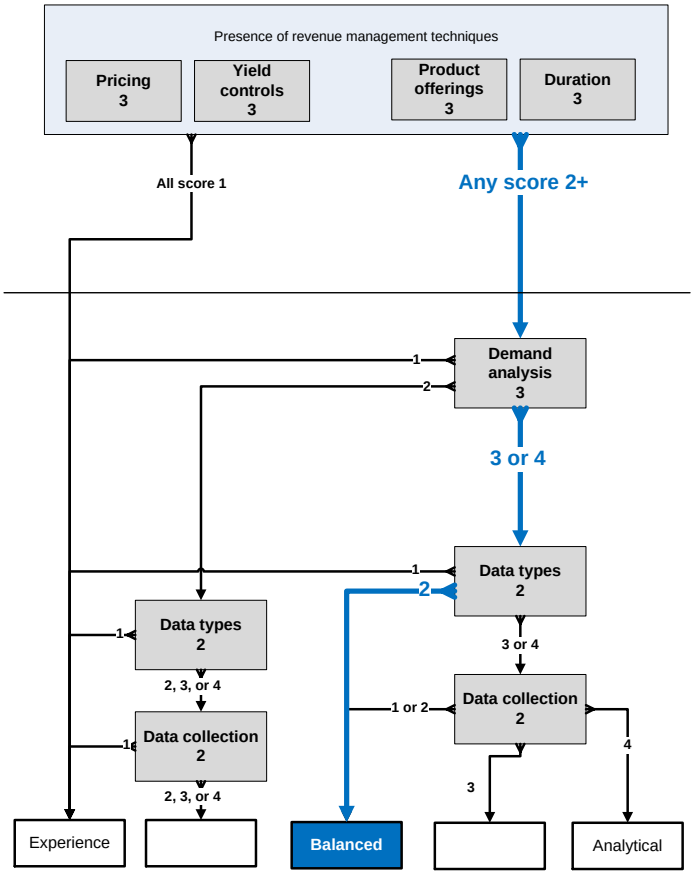

Sources consulted

The following sources were used in examining revenue management in your organisation.

- Interview with owner-operator: 19th October, 2010
- Interview with owner-operator: 2nd June, 2011
- Company website
- Company brochure and other advertising

Range of practices

We locate your organisation's revenue management through these seven key activities. Our review compares the practices found in your business against descriptions from existing academic research. Each activity is measured on a 1-4 scale; a '4' reflects *analytical* revenue management while a '1' reflects *experience-based* revenue management. This scale is designed to encompass all organisational settings and so certain practices may not necessarily be appropriate for your organisation. A summary of the interview(s) is included as an appendix at the end of the report.

Pricing

This activity assesses differential pricing in your organisation. Differential pricing is the practice of charging different prices for products / services based on what different customers are willing to pay. This helps in getting the most revenue from each individual customer.

1	2	3	4
Prices are not based on demand patterns or customer willingness to pay.	Prices reflect differences in demand across products / services.	Prices reflect differences in demand across customer types and products / services.	Prices reflect differences in demand across time, customers, and products / services.

Current practice

- Pricing is considered the most important feature to customers.
- Pricing differs between customer groups and sales channels.
- Costs and competitor activity hinder pricing based on customer willingness to pay. A framework is used to combine these factors in pricing.
- Conference pricing follows competitor prices. This reflects the business's relative inexperience in the area and the role of the conference facility.

Yield controls

This activity assesses capacity reservation in your organisation. Capacity reservation is the practice of reserving products / service capacity for more profitable customers during times of high demand. This helps in maximising the revenue earned from the number of products / services provided.

1	2	3	4
Products / service capacity are not reserved for more profitable customers.	Products / service capacity are reserved for more profitable customers. These are informal guides.	Products / service capacity are reserved using formal limits. These limits are infrequently reviewed.	Products / service capacity are reserved using formal limits. These limits are regularly reviewed.

Current practice

- Method of yield control differs between customer types.
- Recently, a system was introduced to automatically increase prices depending on customer bookings.
- Tactical activity is used during times of low demand. This is chosen using manager judgement.
- Building capacity is allocated between different product pools depending on demand. This provides a long term response to changes in expected demand.

Product offerings

This activity assesses the use of product differentiation in your organisation. Product differentiation is the practice of designing your product / service range to target different customer segments. This helps the use of differential pricing and yield controls by discouraging customers from buying a cheaper product.

1	2	3	4
Business only has one product / service; or product / service range not designed for customer segmentation.	Product / service range designed for customer segmentation. Offerings require different physical resources.	Product / service range designed for customer segmentation. Different offerings are made up of pre-existing offerings.	Product / service range designed for customer segmentation. Many offerings use the same physical resources.

Current practice

- The same core facilities are used to serve different customer segments.
- Sales channel is the main method used to charge different prices to different customer groups.
- Length of stay is another way of configuring products to different customers. Discounts reflect the reduced cleaning costs.
- Add-ons are the third approach to creating different product offerings.
- However, manager opinion is that there is limited demand for packages and added service.

Duration

This activity assesses the use of duration control in your organisation. Duration control is the practice of managing the time taken (overall time and variation in time) to create a product or serve a customer. This helps the use of differential pricing and yield controls by making customers more predictable. It also helps to increase the number of customers that can be served by your organisation.

1	2	3	4
Duration control is not actively managed or focuses on entire processes.	Duration control focuses on bottleneck activities. The aim is to reduce total duration.	Operating procedures vary between busy and slow periods. Informal guides are used. Only internal activities are managed.	Operating procedures vary between busy and slow periods. Formal standards are set. Both internal and external activities are managed.

Current practice

- Length of stay pricing and cancellation policies help stabilize customer arrivals.
- Upselling additional service occurs at all times. Vouchers are used to facilitate after hours upselling.
- Process automation is being investigated to reduce the need for staff contact.

Demand analysis

This activity assesses the methods used in analysing demand in your organisation. Analytical revenue management relies on statistical or mathematical models to understand customer demand. This helps in detecting patterns in demand to inform pricing, yield controls, product offerings, and duration.

1	2	3	4
No active demand analysis; or demand analysis uses owner intuition informed by experience.	Demand analysis uses owner intuition informed by general management information systems.	Demand analysis uses statistical models informed by general management information systems.	Demand analysis uses statistical models informed by specifically collected information.

Current practice

- Decision making frameworks and concepts provide structure for analysis. This helps blend a range of demand, cost, and marketing factors in analysis.
- Historical demand and customer behaviour are mainly analysed using managerial experience. This is somewhat supported with operational records.
- There is limited analysis into general industry characteristics. This relies on manager experience and ad hoc feedback.
- Computer support plays a larger part in analysis than previously. However, analysis still centres on manager experience.

Data types

This activity assesses the types of demand data collected by your organisation. Analytical revenue management relies on in-depth records of historical trends. Recording trade details, operating performance, and customer characteristics for individual transactions enriches demand analysis.

1	2	3	4
Demand data is not actively recorded. Transactions are recorded for compliance or cost control reasons.	Demand data is recorded but is highly aggregated. Only summaries are kept, combining a number of transactions.	Basic demand data is recorded for every transaction. Data provides tactical information.	Extensive demand data is recorded for every transaction. Data provides strategic information and helps improve revenue management systems.

Current practice

- Booking and occupancy records are the main types of data used when analysing demand.
- Industry search focuses on identifying events, broad seasonal changes, and overall competitor price points.
- Customer groups have been identified but limited data is kept to inform analysis.

Data collection

This activity assesses the way demand data is collected in your organisation. Analytical revenue management relies on accurate records of historical trends. Regular collection of transactional, competitive, and environmental demand data improves accuracy in demand analysis.

1	2	3	4
Demand data is not collected. Experience and familiarity are the only sources of historical records.	Demand data is collected manually but only infrequently or for one-off projects.	Demand data is collected manually and regularly.	Demand data is regularly collected using automated systems.

Current practice

- Cloud computing software captures bookings from all sales channels and helps automate certain activities.
- Some use of industry research and aggregator websites to understand influences on demand. Few records are kept of this search to inform trend analysis.
- No formal records are kept of customer behaviour or the factors influencing willingness to pay.

MediumStay – Appendix 1: Interview summary

Pricing

Pricing is considered the most important feature to customers.

- Customers are believed to emphasise price over other business features when choosing accommodation.
    - The manager comments: "Price is first, location is second. It seems that if they can get the right price, they're not really too fussed about where they're situated."
    - Accordingly, manager attention is focused on pricing movements and understanding customer behavior.
    - Less attention is given to room quality, add-on service, and other business features.

- This price focus is partly attributed to the financial crisis.
    - A poor economic climate means customers are more price sensitive: "probably pre-2007, location was their prime driver. Whereas now their prime driver seems to be price".

- The growing popularity of internet bookings has also contributed to this trend.
    - Internet tools facilitate customer search for prices and alternative properties.
    - This has also changed the nature of a sale: "It was more combative before the internet because a lot of it was telephone sales. So there was a lot of negotiating. Whereas now, with the internet, there's no negotiating. You just take it or leave it."

Pricing differs between customer groups and sales channels.

- Several common customer groups have been identified. General characteristics for each group determine pricing strategy.
    - Corporate: "the corporate travellers are more time and location focused."
        - They are charged a corporate rate which is generally higher than other groups.
        - Preferred channels are the business's website and direct sales.
        - Direct sales: businesses ask the franchise group to compile a list of contract rates. The franchise group then sends requests to all properties throughout the chain. Each property can determine its own corporate price.
    - Leisure: "where we really have to work our revenue management is with the leisure travellers, who are very price focused."
        - This group is seen as very price sensitive. Promotions and discounts are needed to attract these customers.
        - Preferred channels are 3rd party websites and phone bookings to negotiate cheaper rates.
    - Independent: between corporate and leisure travellers in terms of price sensitivity.
        - No specific pricing actions appear to be taken for this customer group.
        - Preferred channel is 3rd party websites.
    - Long term: customers staying for an extended period.
        - Prices become cheaper for 3 night, 14 night, 2 month, and 6 month stays.

    - Private units: rooms which have been sold to private owners.
        - Refer to Yield controls section for more discussion.

- Different sales channels have different standard rates. This reflects the sales channels commonly used by each customer group.
    - Business's websites: this lists the rack rate which automatically changes depending on the number of rooms available.
        - "The main ones through our website are corporates and probably commercial customers."
        - Prices here are relatively higher than other channels.
    - 3rd party websites: e.g. WotIf, RatesToGo, and LateRooms.
        - "The 3rd party website: the demographics for them is the single independent traveller and the leisure traveller."
        - Prices are lower than listed on the business's website.
        - This is the main channel for sales promotions and tactical price changes: "There will be at least one change every week on the website, whatever period that will be for."
    - Corporate rates: these are case-by-case quotes for certain parties.
        - "Prices stay constant for contracted parties. So we have contracts with people and the rates stay constant for them."
        - A quote is calculated each time a business asks for a contract rate. Thus, prices differ each time.

Costs and competitor activity hinder pricing based on customer willingness to pay. A framework is used to combine these factors in pricing.

- Rack rates focus on cost, quality, and competition.
    - Room cost: "The actual provision of that room. Putting that room onto the internet; how much do we need to get to break even?"
    - Market price point: "What the market's charging. A similar sort of property – we would look at what they were charging."
    - Quality: standard of accommodation, facilities offered, and location.
    - Unintentional feedback: customer comments often suggest the customer was willing to pay a higher price.
        - The manager views this should be deemphasised: "The hardest part then, of course, is not to go and put it up and think 'oh, they think we're too cheap.'"

- A formulaic approach is used to calculate rates for other guest types. This is then adjusted with intuition to make the rate marketable.
    - "We have a formula for working out; so a corporate rate might be 85 percent of the rack rate."
    - Different factors are incorporated for groups such as corporates, travel agencies, and government departments.
        - For example: "That's the 85 percent for the corporates: whether it's a commissionable rate or not, whether GST is included in that rate."
    - Formula outputs are then adjusted using manager experience to match market rates and for advertising.
    - Refer to Demand analysis section for more discussion.

- Discounts and other promotions emphasise cost savings.
    - Guests staying several nights are offered a discount rate. This discount reflects the change in service provided and the resulting cost savings.
    - Weekend rates: "What we've done in that case is that by not having any cleaners on Sunday, we've reduced the rate for someone staying Saturday and Sunday."
    - The manager comments: "it's like taking, [for] the daily rate, the daily costs out of that component. Then making it a rate that people have to buy two or three nights to get it."

Conference pricing follows competitor prices. This reflects the business's relative inexperience in the area and the role of the conference facility.

- Prices are determined on a case-by-case basis by searching for the market rate.
    - "We're not experienced in the conference industry. So we don't take the lead. We ring a few places, get an idea of pricing and price it accordingly."
    - However, some standard prices are listed on the website. Prices vary by the size of facility required and the length of time.

- Pricing is unstructured as the conference facility is seen as an added service with varying use.
    - High variation in conference requests: "It's a much different routine for pricing this. There's no two events the same. There's nobody wanting it 8 to 5. All different hours of the day and night they want it."
    - Added service rather than a standalone revenue stream: "It's probably one of those things that's more of a service and more of an adding value then a viable business."

Yield controls

Method of yield control differs between customer types.

- Different techniques are used to adjust prices and priorities of different customers. This takes into account differences in customer characteristics.
    - Corporate: prices are automatically increased as available rooms are booked.
        - These automated changes are only applied to the business's website, the preferred channel of corporate guests.
        - Negotiated prices remain fixed but managers can assess the need for contract customers at the time of negotiation.
    - Independent: prices are manually reviewed during periodic manager review.
        - Prices are generally constant for this group. They earn less revenue than corporate guests but have higher willingness to pay than leisure guests.
        - Changes are manually applied to 3rd party websites, the preferred channel of independent guests.
        - Only manual changes are made here: "The one [system] that automatically changes our rates is just only our website. It doesn't flow over to the 3rd party website."
    - Leisure: tactical responses are used to attract these customers during pockets of low demand.
        - This customer group is only targeted when occupancy is lower than expected.
        - Promotions and other discounts are introduced by managers and listed on 3rd party websites.
        - 3rd party websites are the preferred channel for both independent and leisure customers. Any promotions targeted at leisure customers also affect independent customers.
        - Promotions are sometimes listed on deal websites such as 1-day and DailyDo. These are targeted at leisure guests.
    - Conference: no specific yield control techniques due to irregular usage.

- Yield control at the organisation focuses on obtaining the right mix of customers.
    - This is reflected by the mix of sales channels used. Ongoing pricing targets corporate and independent travellers – guests who accept relatively high prices. Tactical pricing targets leisure customers on a different channel.
    - The manager comments on the overall approach: "It's getting the seasons right, the peak demand periods right, the group bookings right, and just ensuring that you're not losing revenue by reducing the rooms too much."
    - A good customer mix is vital in the presence of fixed costs: "You have your fixed costs and even though you can reduce costs in a lot of areas, you get a core base of fixed cost which are untouchable. So when your occupancy is low, it [fixed cost] really is a bottleneck for revenue"

Recently, a system was introduced to automatically increase prices depending on customer bookings.

- The booking system automatically increases rates depending on customer bookings.

- Changes are applied to the rack rate.
- "What we do is we have a program where we set our rates probably a bit like an airline does: where we set the rates cheaper further out; as those rates sell at a certain number, the rate starts to increase."
- For example: "for July, we might have a rate on a specific room for $99 in July for 25 percent of our bookings. When it hits the 25 percent mark, it will jump to another rate. It might be $115 a night. A few more rooms sold at that rate, it will jump to a higher rate. So that's all been programmed in."

- Previously, changes were manually made based on manager observation.
  - This was considered a costly and time consuming process: "We subscribe to probably about a dozen internet websites that do accommodation reservations. So we had to continuously be looking at it and monitoring it and changing the rates."
  - Both the manual and automated approaches rely on manager judgement to introduce rates. The only difference is that they are input as parameters rather than actual price changes under the automated approach.

- The new system was introduced at the prompting of a software supplier.
  - "It was by default really. It's part of our reservations system. They changed our reservation system about a year ago to a newer version and for some reason the newer version wasn't happy with our server and our computers for some reason."
  - Refer to Data collection section for more discussion.

Tactical activity is used during times of low demand. This is chosen using manager judgement.

- Tactical promotions are released in response to pockets of low demand.
  - "You can pretty much say, when we're reducing rates on a 3rd party website, we're in the business of dumping stock"
  - Other customer groups provide ongoing sales. Prices on 3rd party websites are therefore generally lower than those on the company website.
  - Promotions are introduced for specific time periods in order to preserve average rates: "It's just for a week and hopefully that could generate some business at normal rates."

- Promotions are generally provided for multi-night stays or add-on service.
  - For example: "We've probably just gone through a pocket of low demand. What I've done is just gone on to the third party websites and just drop the daily rate down and make people buy 2 or 3 nights to get it."
  - For example: a Queen's Birthday package offers a weekend stay with internet, parking, and breakfast.
  - This approach ensures that promotions are accompanied by added value or cost savings. This prevents low margins which would be obtained by just lowering prices.

Building capacity is allocated between different product pools depending on demand. This provides a long term response to changes in expected demand.

- Rooms can be moved between several uses depending on expected demand.

    - Hotel use (about 50 percent of the property): hotel guests pay the highest price per night but have variable demand.
    - Long term stay (40 percent): these guests provide stable revenue. However, they are comparatively rarer and pay a lower average price per night.
    - Private ownership (10 percent): a one-off payment/receipt occurs when the room is bought or sold from private buyers.

- Decisions about size of pool are made yearly and require a relatively long time period to enact.
    - "We look at it at the start of each year and then we review it through the year. Because there's always somebody wanting to go one way or the other. So we will take things on their merits."
    - For example, more units were brought in this year in anticipation for the Rugby World Cup: "A big event generally puts a bit more pressure on; requires that we get some more stock."
    - This is generally a long term response. An exception is for desirable rooms: "if an ideal room type came up, then it would require a different sort of negotiation to get it because it'd be something we really want".
    - Shifts between uses may be temporary, e.g. for around 2 to 3 months.

Product offerings

The same core facilities are used to serve different customer segments.

- Physical room differences (size, quality, and view) are not the main way of segmenting customers.
    - Within each room size, rooms have similar furnishing and quality. There are no 'premium' or 'budget' room categories.
    - Customers staying on a discounted rate are often assigned a room on a lower floor. However, this is not advertised at the time of booking.
    - Sales channel, length of stay, and added service are the preferred methods of segmenting customers.
        - These methods provide a relatively cheap way of segmenting customers compared to physical differences.

Sales channel is the main method used to charge different prices to different customer groups.

- The main cost is the time spent updating different booking channels.
    - Own website: automatically updated.
    - 3rd party websites: changes must be manually made by managers. These changes need to be made across all relevant websites:
        - "Some websites we just leave, but they're the websites that don't give us enough business. The ones where we generate a lot of business, like WotIf is a big website, then we tend to override it if we have to."
    - Promotion websites: advertisements must be individually created for each site.
        - "We do have a package that we run on a site called DailyDo. Have you heard of that? It's where you put your ad. up on their website for 24 hours."

- However, customers are free to use any booking channel. This weakens the ability to segment customers using sales channels.
    - For example, corporate customers can book from the relatively cheaper 3rd party websites even though they may have a higher willingness to pay.
    - Refer to Pricing and Yield controls section for more discussion.

Length of stay is another way of configuring products to different customers. Discounts reflect the reduced cleaning costs.

- Discounts are offered on multi-night stays.
    - The manager comments: "if we get them to purchase a 2 night or 3 night stay, then we can give them a good rate".
    - This discount passes on the savings from reduced service: "It's a bit of a win-win. It saves wages on servicing the room and it saves me the linen cost for the room."
        - Servicing can be arranged as either daily or weekly.
    - A large discount is possible with reduced service: "They might buy 3 nights stay and only stay 2 nights because it's cheaper than buying 3 full nights"

- Different rate bands are offered depending on the length of stay, with larger discounts for longer stays.
    - Medium term stays – 3 to 14 days: "We will probably in most cases just take 10 percent off our lowest daily rate."
    - Long term stays – 2 months or more: "We see what the going rate is around town and then we price it up a little bit above that. Then we add in some power and water. Then we set our rate from there."
        - Guests pay two weeks' rent in advance, an administration fee, and a utilities charge. Rooms are serviced during the stay.

- Some use of special offers for event markets.
    - For example, a discount price and free breakfast was offered on stays during rugby game days. Customers must contact the property to obtain the discount.

Add-ons are the third approach to creating different product offerings.

- Guests have the option to add extra services to their stay.
    - Food: buffet breakfast, breakfast packs, and pantry shopping.
    - Information: wireless internet, and booking itineraries.
    - Convenience: laundry, car parking, and massage.
    - Children: portable cots, and babysitting.
    - Lounge: a pass to a lounge with televisions, newspapers, print facilities, copy facilities, and complimentary refreshments and snacks.
    - Catering is available with conferences

- Facilities are offered to distinguish between different product types.
    - Used for standard rate classes:
        - A full package offers parking, breakfast, internet, and lounge access.
        - A corporate rate offers lounge access and breakfast. This is one step down from the full package; no parking or internet access provided.
    - Add-ons can help make promotions more attractive during times of low demand.

- Facilities are withheld for customers paying a discounted price.
    - For example, no breakfast, internet, or parking. They may also be given rooms that have poorer views.
    - Internet listings advertise these restrictions: "That's the beauty of the internet. They've already decided what they're paying and acknowledge the fact that they won't be getting a suite for that rate. So they're happy."

However, manager opinion is that there is limited demand for packages and added service.

- Many customers are only interested in buying a room without add-ons.
    - The manager comments: "It's difficult now to put a package together because we find that people are so used to now just buying the basic commodity; that they don't actually want packages."

        - Phone: “people usually bring their own cellphone so they don’t need phone activity”.
        - Internet: “They’re happy to go to a café and spend a couple of dollars, so they don’t really want internet.”
        - Breakfasts: “They don’t really want continental breakfast because they’re not the continental type – they’ll want to go somewhere like McDonalds where they get a cooked breakfast.”
        - Other: “Then you can put wine and stuff in it but what if the people don’t drink? There’s quite a few people like that around these days.”
    - This is partly explained by increasing price sensitivity and internet search: “I think when it comes to packages, I really think the days of packages are diminishing. Because of the internet and because of the fact that people do not want to be paying for items they’re not going to use.”

- Packages are still popular with corporate guests.
    - Two options are offered: “So we have a corporate rate, then we have a corporate ‘The Works’ rate. For $15 dollars more, they get about $40 worth of product. That is quite popular with the corporates.”
        - This provides internet, parking, breakfast, and lounge access.

- Package offers are available on conference bookings.
    - Accommodation can be booked at a 10 percent discount from standard rates.
    - Two free car parks with each booking.
    - Catering and conference equipment is also offered.

.

Duration

Length of stay pricing and cancellation policies help stabilize customer arrivals.

- A full deposit and a cancellation fee are used to penalize cancellation.
    - Reservations are charged in full on a credit card before arrival.
    - There is a $20 penalty on cancellations. If cancelled 12 hours before the check-in the remainder is fully refundable. Otherwise no refund is offered. However, the non-refundable amount can be used to pay for future stays.
    - These policies appear more flexible than those found in other properties.

- Promotions and discounts for longer stays help promote stable capacity use.
    - Discounts for weekend stays help increase revenue during periods of low demand.
    - Contrast this to discounts for single nights, which may be less effective at encouraging stable revenue.
    - Long term stays help ensure a stable revenue flow over a long period of time.
    - Refer to Pricing section for more discussion.

Upselling additional service occurs at all times. Vouchers are used to facilitate after hours upselling.

- This is done on-shift as well as after hours.
    - On shift: 'If they're checking in during normal office hours we will try and sell them all the products that they normally have."
    - After hours: "If they're checking in after hours, we will take a shot in the dark and put, say, a parking voucher in their folder and an internet voucher. If they don't want either of them, they will generally come and tell you first thing in the morning. They don't seem to muck around because they don't want to pay any extra."

Process automation is being investigated to reduce the need for staff contact.

- One goal is to automate the booking and check-in process.
    - The aim is to serve customers without face-to-face staff involvement: "We are looking at being totally reliable [sic] on the internet for reservations and looking at how we can get people checked in and checked out without having the customer experience with another person."
    - This can save on labour costs and allow after-hours access: "More automation so that customers can have more control over their movements and not be reliant on conditions of the hotel."
    - Automation can also potentially provide greater monitoring. For example, to check the use of various facilities.
    - Automation can also free up management attention for strategic and tactical issues.

Demand analysis

Decision making frameworks and concepts provide structure for analysis. This helps blend a range of demand, cost, and marketing factors in analysis.

- A formula provides the starting point when pricing different customer groups. This focuses on costs.
    - This starting point ensures that all significant cost differences are incorporated in pricing: GST, commissionable rate, fixed costs, and variable costs.
    - The formula creates several tiers of pricing: "We will have a rack rate; and then for the corporates we will have a percentage of that rack rate; government departments another percentage; and inbound and outbound too operate at a different percentage as well."

- Formula outputs are then adjusted to incorporate competitor landscape, marketing, and demand considerations.
    - Adjustments for competition: "You get that rate, you will look at it and think about and analyse that. Is that too high still for that corporate rate or should it be something else? Then we will set it."
    - Adjustments for demand: "The other big driver too is you get sort of confirmation from the market that you are strategically placed at the right price range."
    - Adjustments for marketing: "You can use science and costs and everything as much as you like to come up with the right figure. But when people are looking on the internet, they aren't going to snap at it."

- These adjustments rely on manager experience and intuition. There is some informal analysis to guide the decision.
    - Strong emphasis on manager experience: "After we've used all the scientific methods, it's going to come to a figure. Then I look at that figure and get a gut feeling. Is that going to be on the mark?"
    - Some cost analysis to inform the amount of discount appropriate: "It saves me wages on servicing the room and it saves me the linen cost for the room. But on the other hand I still have to pay wages for the staff to be here anyway."
    - Some market research to inform price points: this involves searching for competitor prices from publically available information.

- New staff training includes revenue management and cost concepts. This is in addition to procedures and operations.
    - Example regarding new manager training: "We've just been talking about revenue management. I've been giving him an overview of how the whole thing works. I've just got to try and give him more tools so that he can make better informed decisions when he's faced with those things"
    - This training focuses on the trade-off between additional costs and revenue.
        - Costs: overall room costs, and fixed costs.
        - Revenue: effect of cheap rates, effect of expensive rates, and trigger points for when to sell a room.

Historical demand and customer behaviour are mainly analysed using managerial experience. This is somewhat supported with operational records.

- A range of factors are considered regarding customer psychology and buying behavior.
    - Pricing attractiveness: "Have something on the internet that, when people are looking, is going to attract their attention." For example, $99 is considered more attractive than $100.
    - Price sensitivity: "You kind of watch the websites. You look at what your returns are for what your pricing is, and you start to work out where the trigger points are for people."
    - Effect on length of stay: "There are trigger points where people will buy 2 and 3 nights against a one night stay."
    - Web search behavior: "As they scroll down, they tend not to look at the hotel itself – the name of the hotel. They just scroll down the rate. Then they see a rate that triggers off the point where they think they can afford it. Then they look at the hotel and the location."

- Depth of analysis differs between customer types and competitive environments.
    - For example, more analysis is done for corporate travellers and leisure travellers than for independent guests.
        - Corporate: these guests provide high, standard revenue and so require ongoing review. This group is seen as time and location focused and so requires different analytical emphasis.
        - Leisure: these guests are targeted when there is a need to "dump" stock. This also requires ongoing review.
        - Independent: these guests are passively taken from standard channels. No specific analysis is done for this group: "Independent travellers we kind of expect to pick them up from the 3rd party websites"
    - Economic boom periods reduce the need for rigorous analysis.
        - Less analysis was previously done: "I don't think we identified too much about our market and our competition at that time because everything was so buoyant. Demand was high; supply was probably not as much as it could've been. So it was pretty buoyant times."

- A mix of managerial experience, historical results, and published industry research is used to understand customer and demand behavior.
    - Manager experience: "You get to know times of the year when you'll have high demand for rooms. There are peaks and troughs."
        - Consistent patterns are easily understood and so do not need to be actively analysed.
        - Examples include: seasonality, customer psychology, and buying behavior.
    - Historical results: internal performance is reviewed to assess the effect of activities and decisions.
        - Public holidays and events: "The public holiday time – it just seems to take a dive. That's why Queen's Birthday weekend we're trying to do a package on WotIf to try and get customers in."

        - Customer history: this informs upselling opportunities and customer loyalty: "When we book a customer in, it automatically defaults to the list of that customer's previous activity at the property."
        - Uptake on promotions: indicates the types of promotions to offer in the future. For example, packages of additional service are found to be less popular than discounts for multi-night stays.
        - Explanations rely on manger analysis: "Accommodation seems to take a dive because the corporates don't come into town."
    - Industry research: The franchise group provides reports and information manuals on a range of topics.
        - "They have a website that you can go to, to get any information on things that you want: it could be refurbishment or customer demographics. You can just go onto the website; it's a communal website we all subscribe to."
        - Limited use of industry demographics. See below for more discussion.

There is limited analysis into general industry characteristics. This relies on manager experience and ad hoc feedback.

- Industry demographics play a small role in analysis.
    - "I don't think all these stats mean a heck of a lot or are that important; because really what's important is who's staying at your place. There's people around so you've just got to capture them."
    - Industry trends have an indirect effect on performance: "That doesn't seem to have a flow on effect to your hotel. Because unless you've got a presence – you're putting your hand up – they're not going to come to stay with you. They don't just come automatically because tourism is up."
    - However, some market analysis is vital for successful revenue management: "If you don't think it's like that [very competitive] then I don't think you're engaged in the market. You've probably got low occupancy and high rates."

- Casual feedback provides confirmation that prices are appropriate for the market.
    - The manager comments: "You generally get confirmation for the corporates and the travel agencies. They'll make comments like 'that's a good rate'. Then you'll know that you're pretty on the mark."

Computer support plays a larger part in analysis than previously. However, analysis still centres on manager experience.

- Computer support is primarily for enacting decisions and presenting data.
    - Automated systems track customer bookings and change rates based on manually defined parameters: "It changes automatically. As the demand goes up, the rate changes."
    - These parameters are chosen by managers rather than through statistical and mathematical models.

- Previously, analysis was more reliant on manual review and action.
    - "We've had that system [current system] for about a year now. Prior to that, we had to continually be focused on the internet web pages."

    - Analysis previously relied on constant manager review of incoming bookings over several sales channels.

- Manual review and action still needed for certain decisions.
    - Most sales channels are still reviewed on a constant basis. Unpopular sales channels are not actively monitored.
    - Automated changes are applied to the business's website. This saves manager attention for this sales channel.

Data types

Booking and occupancy records are the main types of data used when analysing demand.

- Booking numbers are used at an individual level in computerized systems and at an aggregate level in manual decision making.
    - Both automated and manual analysis focus on booking counts and occupancy.
        - Automated system: this monitors the number of bookings received. It adjusts rack rates based on set parameters.
        - Manager analysis: managers review booking reports and gaps in occupancy as part of ongoing analysis.

- The main data types are those covering internal activity records. There is a focus on data for operating requirements rather than data to understand factors which influence demand.
    - Bookings: booking numbers, rooms occupied, rate paid, and sales channel.
    - Costs: cost of rooms, cost of ongoing activities, some measure of the costs of changing listings or changing prices.
    - Customer: rate paid previously, room previously used, comments, facilities purchased, country of origin, and contact details.
    - Promotion uptake: type of promotion and effect on sales.
    - Limited evidence found on analysing factors which influence the average rate received or the relative popularity of different room types in different situations.

Industry search focuses on identifying events, broad seasonal changes, and overall competitor price points.

- Data on industry trends focus on identifying factors which will affect overall booking level.
    - No evidence found of data collection to measure the size of the effect of these events.
    - External events: Rugby World Cup, Queen's Birthday, regular sporting events, and events at a nearby stadium.
    - Seasonal effects: monthly bookings, and weekday versus weekend bookings.
    - Industry: only economic climate. Industry demographic reports are not reviewed.

- Data on competitors is used to understand market price points.
    - This focuses on identifying common price points.
        - Competitor prices are mainly used for long term rates and conference pricing.
        - Some review of competitor prices when adjusting 3rd party website listings.
    - Limited use of competitor data to understand market position and to inform strategic activity.
        - Previously, data was available on competitor occupancy: "One piece of information that we'd like to have that we used to have is information on what occupancy other hotels in the city have."
        - This data became unavailable due to increasing competitive pressure.

Customer groups have been identified but limited data is kept to inform analysis.

- The only customer data recorded is contact details and booking details.
  - "The information that we collect is not really used for anything specific. Usually the only thing it would be used for is [when] we're actually having to look up something that happened."
  - Country of origin is the only demographic information collected. For example, no information is collected on purpose of travel or the guest's occupation.
  - Guests are invited to join a mailing list. Some data is collected here on market segment and preferred sales channel.

- Proportions of different customer types and features of customer types rely on manager observation and ad hoc feedback.
  - Internal measures give some guidance on proportion of customer types: sales channels, promotion uptake, and room types sold.
  - Refer to Pricing and Data collection sections for more discussion.

- Table 1 summarises the main market groups identified during the study.

Table 1: Customer features which may influence willingness to pay

Predictable behaviour	Unpredictable behaviour	Features currently considered in pricing	Other potential influences on pricing
• Travel agents • Contract clients • Long term stays • Business traveller • Government departments	• Direct to public sales • Independents • Leisure guests • One-off groups • Staff relocations	• Booking channels • Length of stay • Partnerships with other properties • Services bought • Negotiations over the phone	• Check-in/check-out time • Events • Weekday stays • International vs. domestic guests

Data collection

Cloud computing software captures bookings from all sales channels and helps automate certain activities.

- This system integrates many functions in the business.
    - Reservation system captures bookings from all channels.
        - This focuses on data to facilitate the booking rather than to understand demand.
        - Some data is entered by the customer (e.g. name, address), others are captured automatically (e.g. booking channel).
        - The manager comments: "Our reservation system is programmed to get specific information out of a reservation before it will allow you to complete the reservation. So there are some things that we need – information that we do need on customers."
    - The system builds a history of each customer. This could be used for customer profitability analysis and to understand customer segments.
        - The manager comments: "once we've made the reservation, it goes into a bank. If the customer's been there before, it will find when the customer's been there and add it to that bank of things".
    - Other features of the software system:
        - Pricing: this tracks bookings and automatically change rates listed on the business's website.
        - Accounting: receipts, payments and other financial reporting.

- This system is relatively new to the business.
    - The vendor recommended this new system following compatibility issues in existing software.
    - The added functions are regarded as valuable and "it's not much more a month than what we were paying".

Some use of industry research and aggregator websites to understand influences on demand. Few records are kept of this search to inform trend analysis.

- Managers manually review 3rd party aggregator websites to understand market price points.
    - Prior to the automated pricing system, this search was done frequently.
    - Regular search is still needed as the pricing system only changes certain sales channels.
    - This information is collected as needed, but there are no formal records to help understand trends in behavior.

- The franchise website provides resources on strategic tools and software options.
    - Strategy examples: refurbishment and customer demographics.
    - Software examples: reservation systems, and accounting systems.

- Previously, a system was in place to capture occupancy of competitors.

- The system was only maintained during strong economic times: “About 4 or 5 years ago we had a system working, but I think it was only working because things were pretty buoyant.”
- “Since the recession, people are trying to guard what their movements are; because I think they don’t want to let people know they haven’t got anyone staying there.”

No formal records are kept of customer behaviour or the factors influencing willingness to pay.

- Casual feedback and manager observation are the main tools used to understand customers.
  - Manager observation is used to inform other behaviour.
    - For example, that guests booking by phone are more likely to negotiate prices.
  - Ad hoc feedback helps understand guest satisfaction and whether pricing is appropriate: “You get that over a period of time from people commenting on what they get and what they’ve paid.”
    - For example: “Someone might pay a particular rate and when they leave they might say ‘I really enjoyed staying here. I will be back here because it’s just fabulous’. Then you know that all the components were right. So you get unintentional feedback about rates pretty much all the time.”

REVENUE MANAGEMENT

Review of current practices

SmallStay

Executive summary

This report assesses revenue management practices at *SmallStay* based on a series of interviews with managers. We classify the business's revenue management as *balanced with an experience-based emphasis*. That is, demand-management and resource-management are informed by a combination of manager experience and analytical outputs with formal data collection. This reflects the organisational structure and business strategy. A detailed summary of the interviews grouped by theme is also presented.

Overview

We classify your organisation as having balanced revenue management, emphasising experience:

Experience-based		**Balanced**		**Analytical**
1	2	3	4	5

Balanced businesses make profit focused decisions using a mix of manager experience and analytical outputs. Pricing and product/service availability are reviewed regularly, with adjustments made depending on how busy the business is expected to be. Revenue management decisions are made using manager judgement, informed by a review of historical trends and his/her expectations about future trends.

Approach

We use a two-stage process to classify revenue management in your organisation:

1. We evaluated the extent to which you employed seven key activities of revenue management.
2. Scores are fed into a decision tree to classify your organisation's revenue management.

Activity scores

Demand-management

Pricing 2

Yield controls 3

Resource-management

Product offerings 1

Duration 3

Analysis

Demand analysis 2

Data types 3

Data collection 2

Figure 6: Revenue management at SmallStay

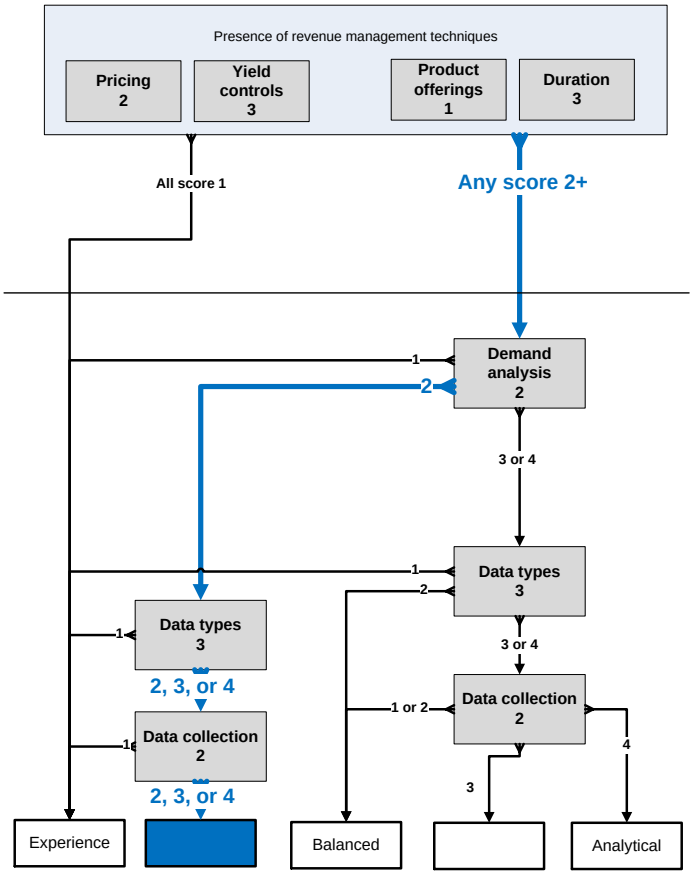

Sources consulted

The following sources were used in examining revenue management in your organisation.

Interviews:

- General manager A
- General manager B

Documents sighted:

- Sample annual budget
- Business plan of suggested improvements
- Statistics New Zealand report on industry demographics
- Loyalty programme booklet

Other sources:

- Company website

Range of practices

We locate your organisation's revenue management through these seven key activities. Our review compares the practices found in your business against descriptions from existing academic research. Each activity is measured on a 1-4 scale; a '4' reflects *analytical* revenue management while a '1' reflects *experience-based* revenue management. This scale is designed to encompass all organisational settings and so certain practices may not necessarily be appropriate for your organisation. A summary of the interview(s) is included as an appendix at the end of the report.

Pricing

This activity assesses differential pricing in your organisation. Differential pricing is the practice of charging different prices for products / services based on what different customers are willing to pay. This helps in getting the most revenue from each individual customer.

1	2	3	4
Prices are not based on demand patterns or customer willingness to pay.	Prices reflect differences in demand across products / services.	Prices reflect differences in demand across customer types and products / services.	Prices reflect differences in demand across time, customers, and products / services.

Current practice

- Pricing is structured around a schedule of rack rates with add-ons and tactical movements.
- Pricing is generally consistent across different target customer groups.
- Costs are the main constraint in pricing. The property's relative market strength reduces the influence of competitor prices.
- Competing business objectives introduce tensions in pricing.

Yield controls

This activity assesses capacity reservation in your organisation. Capacity reservation is the practice of reserving products / service capacity for more profitable customers during times of high demand. This helps in maximising the revenue earned from the number of products / services provided.

1	2	3	4
Products / service capacity are not reserved for more profitable customers.	Products / service capacity are reserved for more profitable customers. These are informal guides.	Products / service capacity are reserved using formal limits. These limits are infrequently reviewed.	Products / service capacity are reserved using formal limits. These limits are regularly reviewed.

Current practice

- With high average occupancy, the business's priority is to achieve stable bookings week-round and year-round.
- Broad promotions are used if forward bookings are low. These are based on manager reviews of upcoming trends.
- Booking restrictions are manually placed to control the number of short bookings.
- Managers also reject or limit certain group bookings to promote booking flexibility.

Product offerings

This activity assesses the use of product differentiation in your organisation. Product differentiation is the practice of designing your product / service range to target different customer segments. This helps the use of differential pricing and yield controls by discouraging customers from buying a cheaper product.

1	2	3	4
Business only has one product / service; or product / service range not designed for customer segmentation.	Product / service range designed for customer segmentation. Offerings require different physical resources.	Product / service range designed for customer segmentation. Different offerings are made up of pre-existing offerings.	Product / service range designed for customer segmentation. Many offerings use the same physical resources.

Current practice

- Room types are the main way of segmenting customers. There is little emphasis on using product range to determine differences in customer willingness to pay.
- Guests can choose to buy standard add-ons. Few examples are found of packaging additional service.
- High occupancy means that managers must upgrade existing rooms or build new rooms in order to improve revenue generation.

Duration

This activity assesses the use of duration control in your organisation. Duration control is the practice of managing the time taken (overall time and variation in time) to create a product or serve a customer. This helps the use of differential pricing and yield controls by making customers more predictable. It also helps to increase the number of customers that can be served by your organisation.

1	2	3	4
Duration control is not actively managed or focuses on entire processes.	Duration control focuses on bottleneck activities. The aim is to reduce total duration.	Operating procedures vary between busy and slow periods. Informal guides are used. Only internal activities are managed.	Operating procedures vary between busy and slow periods. Formal standards are set. Both internal and external activities are managed.

Current practice

- Penalties may be applied for customers who cancel their booking or who require different timing for services.
- Immediate booking confirmation is needed given the small size of the motel.
- Practices are in place to obtain a desired mix of long and short bookings. However, this is done reactively rather than proactively.

Demand analysis

This activity assesses the methods used in analysing demand in your organisation. Analytical revenue management relies on statistical or mathematical models to understand customer demand. This helps in detecting patterns in demand to inform pricing, yield controls, product offerings, and duration.

1	2	3	4
No active demand analysis; or demand analysis uses owner intuition informed by experience.	Demand analysis uses owner intuition informed by general management information systems.	Demand analysis uses statistical models informed by general management information systems.	Demand analysis uses statistical models informed by specifically collected information.

Current practice

- Motel performance is mainly analysed by manager experience and intuition. Analysis is mainly on-shift but there is some use of formal planning.
- Owner interaction and suggestions trigger more structured analysis than otherwise used.
- Demand influences are mainly understood through on-shift experience. This mainly focuses on identifying rather than measuring important factors.

Data types

This activity assesses the types of demand data collected by your organisation. Analytical revenue management relies on in-depth records of historical trends. Recording trade details, operating performance, and customer characteristics for individual transactions enriches demand analysis.

1	2	3	4
Demand data is not actively recorded. Transactions are recorded for compliance or cost control reasons.	Demand data is recorded but is highly aggregated. Only summaries are kept, combining a number of transactions.	Basic demand data is recorded for every transaction. Data provides tactical information.	Extensive demand data is recorded for every transaction. Data provides strategic information and helps improve revenue management systems.

Current practice

- Managers work with a mix of real time indicators and daily summaries.
- Information on competitor activity and internal promotions is regularly used. Some records are kept summarizing key figures.
- Limited data is available regarding customer characteristics. This is limited to country of origin and contact details.

Data collection

This activity assesses the way demand data is collected in your organisation. Analytical revenue management relies on accurate records of historical trends. Regular collection of transactional, competitive, and environmental demand data improves accuracy in demand analysis.

1	2	3	4
Demand data is not collected. Experience and familiarity are the only sources of historical records.	Demand data is collected manually but only infrequently or for one-off projects.	Demand data is collected manually and regularly.	Demand data is regularly collected using automated systems.

Current practice

- Standard industry software packages are used to capture transactions from various booking channels.
- Competitor and customer information are manually collected by managers. The only records kept are on industry demographics.
- The owner's main information sources are reports from managers.

SmallStay – Appendix 1: Interview summary

Pricing

Pricing is structured around a schedule of rack rates with add-ons and tactical movements.

- Rack rates are reviewed once a year to incorporate broad-stroke changes in demand.
    - Standard rack rate changes have been implemented based on manager experience. For example, the rack rate for a Saturday night stay is $10 more than for other days.
    - Other rate classes are used to incorporate seasonality and events.
    - During busy seasons, longer stays are sometimes more expensive per night than shorter stays. This reflects the high expected demand for the room.

- Guests can buy additional amenities or services.
    - Add-on pricing structure reflects standard industry practice, e.g. additional beds, laundry, internet, and meals.
    - Some products which were previously offered for free have been turned into add-ons for purchase. Newspapers, for example, are now available for purchase rather than given for free. This was prompted by sustainability and recycling concerns.

- Special offers are used to respond to periods of low demand.
    - These price changes are "just to answer the market really".
    - The preferred approach is offering a discount rate: "we go to Wotif or our website and drop the price for this weekend for $10 or for next week".
    - Refer to Yield controls section for more discussion.

Pricing is generally consistent across different target customer groups.

- Promotions and business decisions are intended to attract different customer types.
    - The property was affiliated with a chain of motels to attract corporate guests: "Our reason for being part of it was to increase our corporate clientele."
    - The chain requires properties to participate in a 12th night bonus programme. This offers a discount to guests who stay for 12 nights throughout the chain.

- However, pricing does not differ between customer groups. This potentially ignores differences in customer willingness to pay.
    - Prices are the same on the business's website and all aggregator websites. They are listed on approximately 8 websites such as Wotif and Jasons.
    - These websites automatically draw prices from the business's reservation system. This is done to reduce the work needed and to prevent confusion in pricing: "Otherwise we get Expedia ringing up and saying 'they're cheaper than us. What's going on?'"
    - The chain discount is given to all customers, even though affiliation was intended to attract corporate clients.

- Exceptions to standard pricing are customers who negotiate discounts or have special requirements.
    - Negotiations: these are 'reasonably common' and discounts may be given depending on several factors: expected occupancy; customer attitude; and service required.
    - Weddings and other events: these are charged a higher price.
        - One manager comments that this is different to the practice of previous management: "Our previous manager used to do that – he used to give discounts to weddings. And we came along and said what on earth did he do that for? Most other places, if a wedding comes along they don't discount it. They charge more."

Costs are the main constraint in pricing. The property's relative market strength reduces the influence of competitor prices.

- The managers view current competition as less intense than previously faced.
    - Previously, the interviewees have managed properties in other regions. Those motels were situated close to other motels thereby increasing competition.
    - In contrast, the current motel has few strong competitors nearby.
    - This lower competition lets them charge relatively higher prices.

- Transparency of industry prices makes it easy to monitor competitor activity.
    - All competitor pricing and promotions are advertised.
    - Aggregator websites have also provided high industry visibility.
    - One manager comments that it is hard to maintain secrecy for revenue management decisions in their industry.

- As a result, costs are the main constraint on pricing flexibility.
    - One manager comments on the size of discount allowable: "Yeah, just $10 or $20. You don't want to go down too much because if you go down more than like $10 or $15, you're losing money. The time that your costs come out, there's not a lot of margin on it."
    - For example, managers are willing to offer a discount if the customer accepts a lower level of service.
    - Savings possible from cleaning: "[with partial service], you're only doing it [cleaning] once; the other six are only a service which is only quarter of an hour/twenty minutes. So you're saving half an hour every day."
    - Savings arise from wear and tear: "you're not changing your sheets so your sheets aren't going to wear out. They get a sheet change every four days. That's all savings, you can justify the 10 percent [discount]".
    - Convenience of individual guests: "They're paying a lesser rate but they're only one person in that room. Very easy to get in there and service their rooms. They look after them; they don't wreck them."

Competing business objectives introduce tensions in pricing.

- Tactical activity is deemphasized following the owner's objective of increasing average yield.

    - One manager comments they are running fewer tactical promotions this year: “The boss wants an increase so we mightn’t have so many specials.”
    - This contrasts with the manager’s remuneration plan which gives bonuses based on occupancy rates.

- The owner had requested higher prices to achieve a goal of $1 million in turnover.
    - The managers have prepared a proposal outlining other pricing, yield control, and product changes to help achieve the goal.
    - One manager comments: “We’ve been told to put the price up by the owners by 30 percent, but we’ve negotiated 15 percent.”
    - This higher price point would impact the customer types served: “We can justify the increase but we’ve got to be careful that we don’t make that increase so high that only specific people come and we lose the regulars. Particularly the corporate trade.”

Yield controls

With high average occupancy, the business's priority is to achieve stable bookings week-round and year-round.

- High average occupancy and a relatively small property mean that managers focus on accepting and rejecting bookings depending on the length of stay.
    - One manager comments that their motel's average occupancy far exceeds industry occupancy.
    - Guests also book with relatively long lead times, making it easier to manage bookings.

- Different customer segments are targeted to achieve week-round booking requests.
    - A mix of corporate guests and leisure guests is desirable as they generally book different days of the week.
        - Corporate guests: generally stay on Tuesdays and Wednesdays.
        - Leisure: generally stay on weekends.
        - One manager comments: It's how our occupancy gets so high. We've got double-ended."
    - In contrast, properties aimed at a single market have wider variation in booking patterns: "If you're a motel down at [city centre] area, their busiest days are Tuesday and Wednesday. Then just goes either side of that. They get no one over the weekends. They virtually get right down to nothing."

- One possible plan to further improve revenue is to improve room utilisation rates. That is, increasing the number of guests booked per room.
    - Additional guests over the room's standard capacity are charged $20 each. Managers anticipate 30 percent more revenue with higher utilisation.
    - Managers note that many of their units can take up to four additional guests. However, many current stays don't make use of this additional capacity.

Broad promotions are used if forward bookings are low. These are based on manager reviews of upcoming trends.

- Managers interact with booking systems constantly as part of everyday operations. This ongoing review informs the need for promotions.
    - Informed visually: "you look ahead if there's a big gap in the screen, which you often see."
    - Informed by reports: "We just look at occupancy and what it ends up at that month. This is the one we're looking at every day [monthly occupancy report]… you just try and get that as high as we can."

- Promotions are introduced across-the-board rather than on specific products.
    - Promotions are introduced to all sales channels rather than targeted towards specific segments: "So that week you drop everything by $10 or $15. Or you give a free breakfast. That's normally how you'd do it."

- The choice of promotion is determined by manager judgement and experience rather than a systematic approach.
- Discounts are the preferred promotion type. Other methods have been tried or considered but are considered more troublesome
  - Multi-night discounts: buy one get one free.
  - Auctions: listing bargain priced rooms on auction websites.
  - Added service: free breakfasts or other packages.
- One manager comments about the extra work required: "We'd rather stick to one price. Sometimes you've got to load them into the machine and alter everything and that's more work. Sometimes you just find the easiest way to do it."

Booking restrictions are manually placed to control the number of short bookings.

- There is an emphasis on long-bookings, with short-bookings only to fill in gaps.
  - Long bookings are the first priority and are desirable all year round.
    - One manager comments: "We get a lot of enquiries about staying 4, 5, 6, 7 days. And they want to go through the weekend which is ideal. They're good bookings."
    - This provides stable revenue for longer periods of time.
  - Too many short bookings restrict the ability to accept long stays.
    - One manager comments: "If you've filled the place up with one night bookings on a Saturday night, it's like a brick wall. You can't get through it. We have to be quite strict. They might say 'we want all your rooms', and we'll say 'well you can't have all our rooms'."
  - Short stays are a second priority as the day of the stay approaches. Long bookings leave gaps in booking calendars which can only be filled by short bookings.

- Blockers are used to protect popular nights for customers booking several days.
  - One manager explains: "If we saw a day getting filled up we actually put a blocker. Like if Saturday's filling up – saw we had a lot of one-nights – we put blocks in."
  - This complements rack rates which are used to take advantage of standard variations in demand: "Saturday night was always the busiest night. We always put $10 extra."
  - Blockers are overridden if a customer requests several nights stay: "They'll ring up and I quite often will say to a person like that: 'you're just the person I've been waiting for.' Makes them feel special too."

- Blockers are input manually following manager observation.
  - Ongoing review of the need for blockers: "You're always looking ahead to put them in. See what's happening. You can put blocks in months ahead. Like the World Cup – we've got blocks in there. We've got a whole lot blocked out."
  - Blockers are input manually: "We can actually put a line in. It's either like a booking (it's a dummy booking) or it's what we call a maintenance line. So we can easily put that in. Just click the mouse and drag a line through that room. That means it's blocked online. They can't book it."
  - Blocks are removed as the date of the stay gets closer.

Managers also reject or limit certain group bookings to promote booking flexibility.

- Bookings are evaluated for their influence on booking flexibility.
    - For example, requests for wedding stays are partly accepted so that rooms are available for other guests: “We’ll sell 4 or 5, you know, 6 rooms. A quarter [of their request].”
    - This is determined on a case-by-case basis: “If they’re several days in a row, then we’re more likely to be open to taking a bigger proportion of the rooms.”

- Bookings are evaluated on the resource requirements and nature of the booking.
    - Cleaning requirements: “Because it means you have to clean the whole lot on Sunday and people can’t stay longer.”
    - Disruptive behaviour: “We get requests for stag parties. We had one interesting email came through ‘We’re a group of about 10 men and our music’s going to be loud, and we’d like a corner of your motel somewhere so that we won’t disturb other people’… It’s a big red flag. It’s like 'no way! I don’t care how much money you pay us.’ You just don’t have them. They’re a pain.”

Product offerings

Room types are the main way of segmenting customers. There is little emphasis on using product range to determine differences in customer willingness to pay.

- Property is split into rooms with different characteristics. This appears to be the main way of segmenting customers.
    - Size of room: small rooms sleep 3 guests; larger rooms sleep up to 6 guests.
    - Rooms are differentiated by view and quality of furnishings.
    - One exception was found during the Rugby World Cup. Longer lengths of stay were priced at a higher per-night rate than shorter stays. This higher price may reflect the value gained in having a definite booking for several days.

- Some use of product bundling but this mainly reflects changes in resources used.
    - Weekly rates are not offered: "A lot of people come looking for a weekly rate because a lot of motels or apartments offer a weekly rate. Like paying for a house if you're renting a house you pay a weekly amount… we don't actually offer that."
    - Instead, customers are given a discount for a lower level of service.
    - One manager comments this discount is based on the cost savings: "We just discount our nightly rate depending on their circumstances, and how long, and how much they want us to come and service their room."

Guests can choose to buy standard add-ons. Few examples are found of packaging additional service.

- Customers can choose to buy additional services on top of standard room facilities.
    - Add-ons include laundry, internet bandwidth, room service, and dinner vouchers at nearby restaurants.
    - Some of these purchasable features are offered free at other properties, e.g. breakfasts and newspapers.
    - Some complimentary features offered incur a charge in other properties, e.g. internet and child equipment.

- Managers identify the importance of packages to add value but do not always do so.
    - One manager comments that it is difficult to develop novel offerings in the accommodation industry. This is due to competitor advertising and the popularity of aggregator websites.
    - There is a preference for discounts as promotions rather than value-added service: "you can add value like free breakfasts. You can have free cooked breakfast. Some people go to stay two nights and get the third one free but we don't do any of that."

High occupancy means that managers must upgrade existing rooms or build new rooms in order to improve revenue generation.

- At current occupancy levels, it is difficult to increase revenue from existing facilities.

- One manager comments about their current situation: “We’re fairly near the top anyway. It’s hard to get above 80 percent occupancy. So you’ve really got to go really being a more boutique motel.”
- Price increases on existing facilities cannot sustainably grow revenue: “At the moment we do about $800,000 a year and he says he wants to make a million. But, you can’t make a million dollars just by putting the price up… We can only make it if we put more units on, which we gave him a proposal to do.”

- The two options considered are to improve room quality or to increase capacity.
  - An additional 4 rooms (25 percent increase in capacity) would help achieve the target revenue figure.
  - Room upgrades warrant higher average prices: “Your rooms have to be done up to an incredibly high standard [but] you can charge 200 plus, 300 plus.”
  - Even small upgrades can help increase prices: “Not major upgrades but it means you can put the prices up just that much.”

Duration

Penalties may be applied for customers who cancel their booking or who require different timing for services.

- Cancellation fees and booking refunds vary by time of cancellation.
    - A cancellation fee is charged on online bookings. However, this penalty is charged at the management's discretion.
    - Only half the price is refundable if cancelled one week before arrival. A full penalty is applied within two days of arrival.

- Guests are asked to provide an estimated arrival time when booking online.
    - Late check-out and early check-in are available but must be arranged prior to arrival.
    - Otherwise, managers may charge a per-hour fee for unexpected arrivals or departures.

Immediate booking confirmation is needed given the small size of the motel.

- Managers only list on websites which can automatically update their booking system.
    - This was important as guests expected immediate confirmation when booking through the website.
    - One manager comments that given the small size of the property, it would be difficult to guarantee room requests if they had to manually process each booking.

Practices are in place to obtain a desired mix of long and short bookings. However, this is done reactively rather than proactively.

- A mix of short and long bookings is desirable for pricing and yield controls.
    - Long bookings provide a stable revenue flow and help ensure high occupancy.
    - Short bookings are needed to fill out gaps left by long bookings.
    - Advance bookings help managers assess whether to prioritise longer or shorter bookings.
    - Blockers are used to prevent short bookings from filling out popular nights.
    - Refer to Yield control section for more discussion.

- Identifying and targeting new customer segments helps achieve a good booking mix.
    - For example, corporate guests have been targeted to help fill Tuesday and Wednesday stays.
    - This is generally to achieve consistent bookings throughout the week rather than to obtain long bookings.

- No promotions found to attract long bookings.
    - Promotions apply to both long and short bookings.
    - Long term stays are only negotiated on a case-by-case basis when approached by customers.

Demand analysis

Motel performance is mainly analysed by manager experience and intuition. Analysis is mainly on-shift but there is some use of formal planning.

- Ongoing analysis is mainly performed using manager judgment. This is informed by a combination of information systems and on-job immersion.
    - For example, seasonality is informed by day-to-day interaction with the booking system. This is complemented with support from occupancy reports for the months ahead.
    - One manager comments: "We're looking at the screen all the time. The screen comes up and you've got three weeks ahead of you. You can see the next three weeks ahead of you."
    - A threshold approach is used to analyse occupancy. Manager action is prompted if results are lower than expected.
    - Contrast this to a comparison approach where action is taken if results are lower than last year or lower than budget.
    - However, most of the manager's attention is focused on day-to-day operations: "Generally on a daily basis we're dealing with people checking out and getting rooms cleaned"

- Many reports and decision aids are available from the reservation system.
    - One manager comments: "I mean the data's there if you want to take it out of Callista. If you want data, it's there. You can always drag it out."
    - Reports used include: occupancy reports, tariff performance, annual budgets, and cash flow statements.
    - Reports provide benchmarks against previous years and months.

- Managers indicate they are happy with the extent of analysis conducted.
    - There is currently limited emphasis on forward planning: "We're meant to have a bit of forward planning but we don't really do too much"
    - One manager comments: "Our forward planning is really just an ongoing daily thing. Responding to people's phone calls and emails"
    - When asked about formal analysis, managers commented that they were skeptical of the added benefits.
        - "I think you can analyse things 'til you're blue in the face. You know, some things are easy. It's plain."
        - "The last manager here was a figures man. That's where all this comes from. He'd spend hours doing data and figures and things. But it didn't really help the guests coming in the door"

Owner interaction and suggestions trigger more structured analysis than otherwise used.

- Analysis is primarily done at the manager level rather than at the owner level.
    - Managers comment that the owner isn't directly immersed in operations and can have different business priorities.

    - The owner provides goals and suggested actions which managers analyse and implement: "He can see that he has a good property. It's located well, it's doing well. So his thinking is I can make more money. The price needs to go up."

- Many reports are generated and sent to the owner on a regular basis. These cover several areas of performance:
    - Qualitative performance: forecasted occupancy, historical occupancy, and manager explanation of trends.
    - Financial performance: income by room type, cash flow, and ancillary income.
    - Demand factors: customer demographics.
    - Refer to Data types section for more discussion.

- These reports appear to be for accountability rather than to analyse performance.
    - One manager comments that these reports are compulsory: "It's for the owner but we've got to do it."
    - However, in creating the reports, managers gain a familiarity with it: "It's like the focus for each morning. [He] downloads all of this information because then he's got to fill in a sheet – which is that one there. That keeps a pretty good eye on things doesn't it?"

- A recent business plan illustrates the type of analysis which is used in more complex situations. The owner had recently suggested a price increase to improve revenue.
    - Managers formed a scenario analysis outlining different tactics and the possible effects on revenue. The following suggestions were made:
        - Price increase only: managers anticipate a 20 percent drop in occupancy.
        - Increase capacity use: housing more guests per room can increase rates by about 30 percent.
        - More rooms: one manager comments "The place is worth $7 million and the return on $7 million is not enough on a 15 unit model. It should be really 20"
        - Upgrading facility: managers estimate that room refurbishment can justify a $10 increase in nightly rate.
    - All suggestions included illustrative calculations and qualitative reasoning.
    - However, numerical figures appear to be based on estimates and experience rather than formulaic calculations or historical results.

Demand influences are mainly understood through on-shift experience. This mainly focuses on identifying rather than measuring important factors.

- Customer groups are mainly analysed by intuition and experience. There is limited analysis into the relative profitability or the common characteristics of different customer types.
    - Common groups include international tourists, corporate guests, guest relocations, and renovations.
    - Some support from automated collection systems. This focuses on identifying customer types rather than the effect on willingness to pay.
        - The reservation system collects some data on customer demographics.
        - A report outlining website bookings showed that a significant majority of reservations were made through the business's website.

    - One manager comments that some analysis is done due to affiliation requirements: "We track a certain amount. We do track what's going on as far as [the accommodation chain requirements] is concerned. Because the people that we meet regularly want to justify that it's working. We track that on a monthly basis."

- Competitor activity is observed as part of ongoing pricing analysis
    - Managers regularly check competitor price points and promotions.

- A try and see approach is used for new activity
    - Certain new promotions are tested rather than formally analysed.
    - For example, the motel had experimented with listing rooms on auction websites.

Data types

Managers work with a mix of real time indicators and daily summaries.

- Room-by-room occupancy is observed as part of regular operations.
    - The reservation system displays bookings for each individual room. Gaps on the screen represent empty rooms.
    - A report on occupancy by month is used to monitor the bookings received each day.
    - One manager illustrates its use: "You know that April's not bad anyway – we're pretty high for April and we haven't even got there yet"

- Average rate is the other main performance indicator used on a regular basis.
    - One manager comments: "People get this idea into their head [that] occupancy is everything. But it's not."
    - A report outlines the changes in average rate received for each month.
    - They complement these records with additional explanation when interpreting results: "we're in the middle of the year, from $154 down to $101 [average rate]. Probably because we had those $60 specials on".
    - Tariff performance measure: average rate minus average costs.
    - Tariff potential measure: a measure combining occupancy and average rate – "That means [the total revenue] if we were full every night and then you divide it by the occupancy"

Information on competitor activity and internal promotions is regularly used. Some records are kept summarizing key figures.

- Managerial attention is given to promotions but full details are not always put into the system.
    - Booking engine only lists rack rates: "Our booking engine in our computer here does not change. Whatever we're advertising is different to what our booking engine says. Our booking engine only has the rack rate."
    - Sufficient records are available to report on the history of price movements.
    - Records are kept for the 12th night free promotion: "We do get people coming back with them. Not as much as some properties do. Some properties they have probably ten a month. But we probably, as [he] says, we may get two a month"

- Competitive position is assessed using third party data sources.
    - To nearby competitors: A manager regularly browses third party websites to see what competitors are doing.
    - To the industry: Statistics New Zealand reports industry occupancy on a monthly basis
    - For example, one manager comments on their performance relative to the industry: "If the average [occupancy] is 50 percent and we're 80, some have got to be in the 30 and 40. That's not much."

- The owner emphasizes turnover and occupancy as key performance measures.
    - Manager remuneration is based on average occupancy achieved.
    - The owner sometimes sets goals for target turnover figures.

Limited data is available regarding customer characteristics. This is limited to country of origin and contact details.

- Guests provide very little demographic data at the time of booking.
  - This is primarily contact details, although country of origin is recorded.
  - Guests redeeming 12th night free booklets must provide contact details.
  - There is no record of the purpose of the stay, e.g. leisure vs. business.

- As a result, it can be difficult to understand how different services or motel features affect demand.
  - For example, the motel is part of a Healthy Hotels certification programme which imposes special cleaning standards.
  - One manager explains that they do not receive feedback about its value: "I haven't had anybody ring specifically to ask for it. But I do think people notice that it's there. As you say, you found it on our website. When people are booking we haven't been told that's the reason why they've booked. But it's there for their information."

- Current understanding of customer make-up is gained through observation.
  - For example, corporate guest numbers are identified through observations.
  - When asked about whether they kept records of corporate stays, managers comment: "We don't really. We know it's going up: we've increased it a lot since we've been here."
  - Table 1 summarises common market groups identified as part of the study.

Table 2: Customer features which may influence willingness to pay

Predictable behaviour	Unpredictable behaviour	Special requirements	Features currently influencing pricing
• International tourists • Corporate guests • Regular guests • Network loyalty • Long stays • Advance bookings • Independents	• Relocations • Renovations • Short stays • Last minute bookings	• Allergy • Events, weddings • Families • 'Messy' guests	• Saturday night stays • Weekday + weekend bookings • View: waterfront vs. garden view • Room quality • Events – e.g. Rugby World Cup • Customer attitude

Data collection

Standard industry software packages are used to capture transactions from various booking channels.

- Callista is the reservation system and MYOB is the accounting system.
    - These systems are used to record all transactions and expenditure.
    - Callista collects all bookings from online sources. This includes both the business's website as well as third party listings.
    - Software outputs help managers visualise the available rooms and find gaps in upcoming weeks.
    - The software also provides the reporting tools used on an ongoing basis. However, not all reporting functions are used.
    - This infrastructure was developed by a previous manager. Prior to that, all transactions were recorded manually.

- Transactions sometimes require manual input by managers. Not all transaction details are recorded by the system
    - Phone reservations are manually entered by managers.
    - The booking engine only records rack rates, not promotional rates.

Competitor and customer information are manually collected by managers. The only records kept are on industry demographics.

- Industry research articles and reports are the most formally collected. These reports are periodically accessed and recorded to understand the environment and improve decision making.
    - Statistics New Zealand accommodation demographics: reports are accessed and collected to assess performance relative to the industry.
        - Managers keep a history of these reports for their reference.
    - Industry research: managers periodically access research articles and other resources from Resort Brokers. This helps guide decision making.
        - For example, the trade-off between higher volume and wear and tear.

- Competitor actions are considered easy to observe and are manually collected. However, no records are kept of results.
    - Managers regularly check aggregator websites to gauge current trends and competitor promotions.
    - This search is done informally with no records kept about competitor activity.

- Very limited evidence found of collecting customer demographic data. This is mainly through observation.
    - One manager comments that they "pick [up] on certain things that are happening in the area by the number of phone calls you get on it."
    - Manager observation is used to identify and track customer types.
    - Reservation system only records the guest's country of origin.
    - Refer to Data types section for more discussion.

The owner's main information sources are reports from managers.

- Regular management reporting is the owner's main source of information.
    - Day-to-day management is left to the managers. The owner only offers occasional guidance and intended business direction.
    - Many reports created by managers appear to be for the benefit of the owner rather than for ongoing control.
    - Refer to Demand analysis section for more discussion.

REVENUE MANAGEMENT

Review of current practices

BigFood

Executive summary

This report assesses revenue management practices at *BigFood* based on a series of interviews with head office and store-level managers. We classify the business's revenue management as *balanced with an analytical emphasis*. That is, demand-management and resource-management are informed by a combination of manager experience and analytical outputs with formal data collection. This reflects the organisational structure and business strategy. A detailed summary of the interviews grouped by theme is also presented.

Overview

We classify your organisation as having balanced revenue management, emphasising analysis:

Experience-based		Balanced		Analytical
1	2	3	4	5

Balanced businesses make profit focused decisions using a mix of manager experience and analytical outputs. Pricing and product/service availability are reviewed regularly, with adjustments made depending on how busy the business is expected to be. Revenue management decisions are made using manager judgment, informed by a review of historical trends and his/her expectations about future trends.

Approach

We use a two-stage process to classify revenue management in your organisation:

1. We evaluated the extent to which you employed seven key activities of revenue management.
2. Scores are fed into a decision tree to classify your organisation's revenue management.

Activity scores

Demand-management

Pricing 3

Yield controls 2

Resource-management

Product offerings 4

Duration 4

Analysis

Demand analysis 3

Data types 3

Data collection 3

Figure 7: Revenue management at BigFood

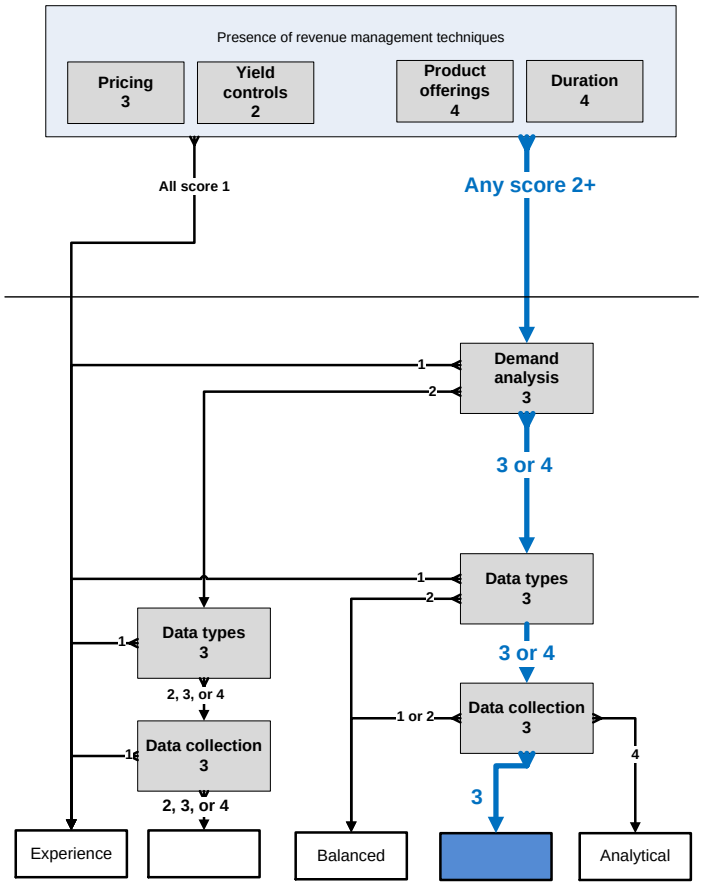

Sources consulted

The following sources were used in examining revenue management in your organisation.

Interviews:

- General manager marketing (National-level)
- Supply chain manager (National-level)
- General manager operations (National-level)
- Area manager (Store-level)
- Restaurant manager (Store-level)

Documents sighted:

- Competitor analysis (graphical and numerical)
- Menu pricing breakdown
- Promotion memos
- Sales trend graphs
- Shift control reports
- Shift summary reports

Other sources:

- Company website (NZ)
- Other international company websites: e.g. United States, China, Malaysia

Range of practices

We locate your organisation's revenue management through these seven key activities. Our review compares the practices found in your business against descriptions from existing academic research. Each activity is measured on a 1-4 scale; a '4' reflects *analytical* revenue management while a '1' reflects *experience-based* revenue management. This scale is designed to encompass all organisational settings and so certain practices may not necessarily be appropriate for your organisation. A summary of the interview(s) is included as an appendix at the end of the report.

Pricing

This activity assesses differential pricing in your organisation. Differential pricing is the practice of charging different prices for products / services based on what different customers are willing to pay. This helps in getting the most revenue from each individual customer.

1	2	3	4
Prices are not based on demand patterns or customer willingness to pay.	Prices reflect differences in demand across products / services.	Prices reflect differences in demand across customer types and products / services.	Prices reflect differences in demand across time, customers, and products / services.

Current practice

- Pricing philosophy has changed from a business-centred approach to a balance of business requirements, competitor actions, and customer behaviour.
- Pricing is one of many levers of revenue management, complementing product mix and duration management.
- Perceived mismatches were noted between the use of consistent national level pricing and the needs of individual restaurants, time periods, and customers.
- Changing pricing across the network is a costly and formal process.

Yield controls

This activity assesses capacity reservation in your organisation. Capacity reservation is the practice of reserving products / service capacity for more profitable customers during times of high demand. This helps in maximising the revenue earned from the number of products / services provided.

1	2	3	4
Products / service capacity are not reserved for more profitable customers.	Products / service capacity are reserved for more profitable customers. These are informal guides.	Products / service capacity are reserved using formal limits. These limits are infrequently reviewed.	Products / service capacity are reserved using formal limits. These limits are regularly reviewed.

Current practice

- Product mix and drive-through emphasis are the main methods of prioritising higher value customers.
- Few formal controls were found to restrict less profitable customers during periods of high demand.
- Static menus and an inability to formally prioritise higher value customers cause mismatches during different time periods and in different locations.
- Several mechanisms are in place to alleviate product mix mismatches.

Product offerings

This activity assesses the use of product differentiation in your organisation. Product differentiation is the practice of designing your product / service range to target different customer segments. This helps the use of differential pricing and yield controls by discouraging customers from buying a cheaper product.

1	2	3	4
Business only has one product / service; or product / service range not designed for customer segmentation.	Product / service range designed for customer segmentation. Offerings require different physical resources.	Product / service range designed for customer segmentation. Different offerings are made up of pre-existing offerings.	Product / service range designed for customer segmentation. Many offerings use the same physical resources.

Current practice

- Strong evidence of product range linked with customer segmentation.
- Product range created from a common set of ingredients and resources
- Stores are required to follow head office decisions about product range, but this intended product mix does not always fit at the store level.

Duration

This activity assesses the use of duration control in your organisation. Duration control is the practice of managing the time taken (overall time and variation in time) to create a product or serve a customer. This helps the use of differential pricing and yield controls by making customers more predictable. It also helps to increase the number of customers that can be served by your organisation.

1	2	3	4
Duration control is not actively managed or focuses on entire processes.	Duration control focuses on bottleneck activities. The aim is to reduce total duration.	Operating procedures vary between busy and slow periods. Informal guides are used. Only internal activities are managed.	Operating procedures vary between busy and slow periods. Formal standards are set. Both internal and external activities are managed.

Current practice

- Service is the main revenue management lever at the store level.
- The network formulaically controls standard operating procedures.
- Head office operations actively manage national systems used to regulate duration.
- Sample initiatives: layout and equipment changes are being implemented to improve operations processes.
- Store level managers prefer drive-through customers over dine in customers.
- There is often a trade-off between duration management and other business objectives

Demand analysis

This activity assesses the methods used in analysing demand in your organisation. Analytical revenue management relies on statistical or mathematical models to understand customer demand. This helps in detecting patterns in demand to inform pricing, yield controls, product offerings, and duration.

1	2	3	4
No active demand analysis; or demand analysis uses owner intuition informed by experience.	Demand analysis uses owner intuition informed by general management information systems.	Demand analysis uses statistical models informed by general management information systems.	Demand analysis uses statistical models informed by specifically collected information.

Current practice

- Demand analysis spans across departments and between hierarchy levels.
- Analytical approach emphasises measurement and quantifiable results.
- Benchmarking and variance analysis are the primary analytical methods. Other techniques include scenario modeling and trend analysis.
- On-shift analysis uses a mix of analytical results and manager experience.
- Intuition and experience are used to analyse factors that are difficult to capture and systematically examine.

Data types

This activity assesses the types of demand data collected by your organisation. Analytical revenue management relies on in-depth records of historical trends. Recording trade details, operating performance, and customer characteristics for individual transactions enriches demand analysis.

1	2	3	4
Demand data is not actively recorded. Transactions are recorded for compliance or cost control reasons.	Demand data is recorded but is highly aggregated. Only summaries are kept, combining a number of transactions.	Basic demand data is recorded for every transaction. Data provides tactical information.	Extensive demand data is recorded for every transaction. Data provides strategic information and helps improve revenue management systems.

Current practice

- Retrospective analysis relies on aggregates of transaction data. Aggregation is done by day (daily, weekly, or monthly) as well as by product type.
- Operations departments generally use demand data at a finer level than other departments.
- Industry and demographic data are actively collected at an aggregate level, but not tied to individual transactions.

Data collection

This activity assesses the way demand data is collected in your organisation. Analytical revenue management relies on accurate records of historical trends. Regular collection of transactional, competitive, and environmental demand data improves accuracy in demand analysis.

1	2	3	4
Demand data is not collected. Experience and familiarity are the only sources of historical records.	Demand data is collected manually but only infrequently or for one-off projects.	Demand data is collected manually and regularly.	Demand data is regularly collected using automated systems.

Current practice

- Automated systems are used to capture transaction data and operational processes.
- Direct observation and experience are important sources of explanations and can trigger the need for more systematic analysis.
- Manual manager collection is needed if automated systems cannot easily collect the data.

BigFood – Appendix 1: Interview summary

Pricing

Pricing philosophy has changed from a business-centred approach to a balance of business requirements, competitor actions, and customer behaviour.

- Previously, pricing was expected to incorporate cost increases and large price changes were introduced two times a year.
    - This was a requirement of the previous owners, who expected that prices be revised with any cost increases. If the price of an ingredient went up by five percent, "under old management you would put everything up by five percent".
    - Large price changes were made infrequently – "a couple of years ago, we would've done two menu changes a year and that would be in two big hits".
    - However, one manager noted that these large price changes triggered significant drops in sales. For example, referring on a sales trend graph that showed "we were in growth up until August this period and then we took a big price increase. You can see what happened to our sales results immediately post change".

- Current pricing philosophy is viewed as more strategic with incremental changes implemented regularly.
    - This reflects a more holistic view of pricing. "Under our new management, we're much more strategic about our pricing and we expect that pricing is one of the levers that contribute to overall revenue management and business success."
    - Cost changes trigger a search process to consider "are we going to recover the costs solely from pricing or are we going to try and put something else into place to help that might help us grow sales".
    - Customer behaviour plays a stronger role in pricing than before, which prioritised the resources used by the business. For example "a recession creates a whole lot more price sensitivity. So as a business you may decide to, even though you've had cost increases, you may decide to hold your pricing through that period".
    - Marketing views this change as aligning with the perceived price sensitivity in the market and the tendency for competitors to use small price tweaks rather than large price changes. Prices are still thoroughly reviewed on a quarterly basis.

- Prices are largely determined by marketing, with current and predicted cost information provided by supply chain. Internal rules are specific to New Zealand, not the international franchise. The following factors are considered when setting prices.
    - Strategy and tactics: product positioning; competitor price movements; own historical price movements; relative prices between products.
    - Costs and economic: food and paper; labour; supply chain costs e.g. audits, shipping, distribution centre; GST and royalties; inflation; and economic climate.
    - Based on product history and manager perceptions about product positioning.
    - Budgets and performance; product history; budget sales versus actual sales; profit targets.
    - Location demographics – limited focus. See below notes on site-specific promotions.

Pricing is one of many levers of revenue management, complementing product mix and duration management.

- Formal planning lays out the targets from price changes, new products, and other levers of revenue management.
    - Targets are broken down by activity: "we might say we want to grow, and these numbers are completely hypothetical, we want to grow our sales by ten percent over the next year. Two percent of that is going to come from pricing, by putting our prices up by whatever it needs to be to achieve two percent… and the rest of it will come from other initiatives".
    - Other levers of revenue management are efficient service (see Duration section below), new restaurants, restaurant refurbishment, new products, and adjusting existing product range.

- A preference was noted for using product range, rather than pricing, to capture customer willingness to pay. Refer to product range section below for more examples.

Perceived mismatches were noted between the use of consistent national level pricing and the needs of individual restaurants, time periods, and customers.

- Prices are the same throughout almost all stores in the country, with a few exceptions due to ownership structure. However, attributes of individual locations, zones, or cities were commonly raised when describing differences in customer willingness to pay.
    - Examples include nearby competition; location-specific events, such as the Wellington Sevens; school zones; and socio-economic differences where "some areas are less price sensitive than others; tourist areas, CBD downtown areas for example we've got a fairly captive audience".

- Setting different prices by location has been considered by the head office, but its value is uncertain.
    - Difficulties stated include potential customer backlash; point-of-sale system requirements; computer processing requirements; and lost economies of scale when printing menu boards.
    - There was also differing internal opinion about the effects of differential pricing, with managers come from different businesses which have tried it before.
    - Separate menu boards are used for breakfast, lunch, and dinner. This partly aligns pricing with time differences. However, prices do not vary within a day (e.g. lunch rush versus quiet times) or across a week (weekend evenings versus Tuesday evenings).

- Store level managers consider zone-specific promotions a possible alternative, although not all manager suggestions were made with reference to customer willingness to pay.
    - Store-specific promotions were seen as desirable to recognize low willingness to pay during slow periods. Dinner and lunch promotions were seen as effective in leveraging generally higher willingness to pay during busy periods.

- Some manager suggested promotions were aimed at managing excess inventory or a shortage of inventory; or at achieving duration benefits – promotions make it easier to predict what meals to prepare.

Changing pricing across the network is a costly and formal process.

- High costs are a result of the formalised nature of the organisational structure and business model.
  - An executive team reviews all price change recommendations. This includes budgeted figures, reasons for change, and historical movements. Price change notices are then sent to all stores, including instructions on how to implement the price increase at a restaurant level.
  - Initiatives are in place to reduce the cost of changing menu boards – historically the most expensive part of changing prices. For example, one manager highlights that "something I've done with my team is we now sticker price onto our menu boards to give us the flexibility to change cost effectively".
  - Prices are not advertised on the company's website.

- Coupons provide a way of introducing price changes and are used to help meet the budget and as a tactical response.
  - They are decided by head office marketing in consultation with area managers: "they are a sales driven thing. If we see we're behind budget for the month, they will push it in just randomly to get the figures up". For example, coupons were released in response to a set of family meal deals released by a competitor "that's why we've brought out the coupons last week, or two weeks ago, to balance that".
  - Some coupons are offered on a regular basis in a national restaurant guide – The Entertainment Book. This is seen as having limited impact.
  - Several managers viewed supermarket docket vouchers as an effective means of releasing coupons.

Yield controls

Product mix and drive-through emphasis are the main methods of prioritising higher value customers. Few formal controls were found to restrict less profitable customers during periods of high demand.

- Product mix is controlled through menu development and promotions. This helps change the average price charged to match different levels of demand.
    - Mainly achieved through advertising as the full menu is always available. In times of low demand, value offerings are promoted and coupons are circulated. In times of high demand, premium meals can be promoted.
    - Promoting premium burgers leverages limited capacity in busy periods. In slow periods where kitchen capacity is free, promoting value offerings encourages higher capacity usage.

- Preference for drive-through customers reflects the relative profitability over dine-in customers. Prioritising drive-through therefore allocates capacity to this more profitable sales channel.
    - A drive-through focus was found at both the head-office and store-level, with the objective of sixty percent of customers on drive-through.
    - Drive-through offers several cost benefits as fewer staff are required, customers leave no rubbish, and there are no drink refills. The store-level managers were not aware of analysis done on the profitability of drive-through customers versus dine-in customers.

- Product promotions are the main lever in adjusting product mix according to demand as airline or hotel-style capacity allocations inappropriate in restaurant setting
    - Sections of dining area are not reserved for different customer groups, although exceptions are call-ahead groups such as birthday parties or community groups.

- Kitchen capacity cannot be reserved for more profitable customers. Customers are served based on the arrival of orders and front counter staff do not appear to be able to prioritise higher value orders.
    - This may lead to reduced profit margins if there is no emphasis on premium burgers during lunch rush as price-sensitive customers are buying at lunchtime, taking up capacity.

Static menus and an inability to formally prioritise higher value customers cause mismatches during different time periods and in different locations.

- National level marketing sets the menu and promotions. Store-level managers are not allowed to switch menu boards in their restaurants.
    - This is done to ensure sales results are achieved for that month and to provide consistency across stores. Consistency is identified as a key revenue driver at the organisation.

- Fixed menus during busy periods can cause tensions between marketing, operations, and store-level managers.
    - This has flow on effects on duration "where they're like 'we're too busy and we don't want to sell this low priced product".
    - Compulsory advertisements sometimes do not always fit local requirements. Managers comment that menu boards and advertisements are strong influences on customer behaviour. A mismatch between local demographic preferences and advertising campaign is seen to discourage customers: "They say ew, I don't eat beef. Then they walk away to another place".
    - Managers are sometimes frustrated at having to sell lower price-point products when they believe they could be selling higher price-point products: "we believe it doesn't work in all the stores the same... but like they say, it's a marketing guide. So we stick with it".

- Customer goodwill and business priorities sometimes emphasised over yield controls.
    - One manager comments on the tension between marketing and operations and the need to achieve sales results "I'm going okay, but I can't get enough people through the door to hit the sales results without doing this kind of initiative."
    - Value meals are suggested when customers order burgers and sides separately even though the value meal is a cheaper option. Managers believe the customer goodwill benefits exceed the lost revenue to the organisation: "Because it makes them feel good. Makes them feel like you're not just there to make money out of them but you care for them as well. You want to give them the best deal that you can give them."

Several mechanisms are in place to alleviate product mix mismatches.

- National level: Marketing revises unpopular promotions nationwide. For example, a new premium burger which was less popular than expected. Stores were instructed to replace the poster with the a previous promotion item known to be popular.

- National level: Marketing may work with stores expecting crowds from big events. For example, with major events "we'd probably just merchandise our big products, our full price products, and take off any of our discounted products off the menu boards because we've just got the opportunity to sell the products that will make us the most, as opposed to the discounted items".

- National level: Day-part menus are being considered, but viewed as difficult. For example, currently, separate menu boards are set for breakfast, lunch, and dinner. At the time of the interview, marketing was investigating "what are the right products for the lunch versus what are the right products for dinner". One manager notes that "it becomes more and more complicated to change your offering significantly from one day part to the next".

- Store level: Store-specific promotions and local market advertising seen as desirable to match day-part demand and to meet local preferences. Store-specific discounts are seen as desirable during pockets of low demand, while lunch time specials make product mix more predictable during high demand periods. Store-level managers indicate that they would like to advertise higher or lower price point items depending on location – e.g. business districts, tourist areas,

or school zones – or to adapt to perceived cultural preferences in the area – e.g. Chinese customers believed to prefer chicken burgers over beef burgers.

Product offerings

Strong evidence of product range linked with customer segmentation.

- Product purpose varies by strategic business needs and the purpose of each product is communicated to store level managers.
    - Promotions may be introduced to promote ticket count, to raise profit margins, or as a last minute promotion to replace an unpopular item. All stores receive new product memos explaining the purpose of each promotion.
    - Product offerings are viewed as a separate arm to pricing: "for a recession we would focus more on value, low-price-point offerings, which isn't about setting pricing. It's about creating the right deals and offerings by bundling the right products that hit a price point that is relevant in the market place".

- The option to customise meals by adding ingredients or sides lets customers signal their willingness to pay.
    - Severs always ask if customers would like to order fries and a drink with their main item. Additionally, customers are invited to "upsize" their meal where they pay extra on top of their normal meal for a larger sized fries and drink.
    - Customers are always asked whether they would like to add ingredients to their burger at extra cost: "you always ask would you like to add cheese or bacon?" Additional costs can make up a significant portion of original cost. Omitting ingredients doesn't reduce the cost of the main item.
    - Previously, certain ingredients could be added for free (e.g. mayonnaise), whereas now there is a charge for ingredients added.

- Certain product offerings are introduced for reasons other than customer differentiation.
    - Some products are introduced to support brand image. "What we look at from our perspective is who we are as a business and therefore what we want to promote. So for example, [we are] known for having, being more about burgers and being about big and indulgent burgers. So our promotional programme will always have some focus on those big, indulgent products because that is part of delivering who we are as a brand."
    - Products are sometimes used as a tactical response tool: "so things like [a $5 value meal] we actually plan on an annual basis but we could bring that back at relatively short notice if we thought we weren't achieving the results we needed or we had to react competitively to something that was killing us in the marketplace".
    - Products as a tactical response less frequent than previously. This is due to a change to price tweaking rather than infrequent, large price changes.
    - Children and diet-conscious customers are also offered different products.
    - Certain menu offerings, such as wraps, are only offered during certain seasons.

- Lower value products sometimes weaken the ability to distinguish between different customer willingness to pay.
    - Cannibalisation between products: Along with premium products, "concurrently, they have a cheap one. When you're concurrently running promotions, maybe the

barbecue bacon is more appealing. Then everybody will go and buy the $2.90 one instead of the $9.90 one."

Product range created from a common set of ingredients and resources

- Many promotional items use standard ingredients, processes, and equipment. This can be attributed to the operations and supply chain teams who manage menu complexity and feasibility.
    - For example, certain promotional items only use standard ingredients. Some products require unique ingredients such as special patties and sauces.
    - Operations and supply chain are deeply involved in new product development to ensure operational standards are maintained. One manager comments that "we're not allowed to introduce a product that would take a minute and a half to make because you don't get the speed of throughput through the kitchen."
    - Franchisor policies set certain rules on service time, quality, and cleanliness. Manager experience provides other standards. For example, the maximum construction time of any item should be fifty seconds.
    - Initiatives underway to have different products use the same advertising resources. For example, advertising is always kept to either fifteen/thirty second lengths so different promotions can be swapped in as appropriate.

- Standard menu items are regularly bundled to create different products at a range of price points. Bundles earn a lower profit margin compared to individual products but provide opportunities for customers to signal their willingness to pay.
    - Customised burgers: base burger with the option of adding standard ingredients.
    - Value meals: main item with drink and fries.
    - Budget meals: burger, fries, drink, and ice cream for $5.
    - Dinner bundles: designed for more than one diner.

- Unique components are required for some parts of the menu.
    - Breakfast items, desserts, coffees, children's meals
    - See BigFood – Appendix 2: Ingredient count analysis for a sample comparison of the number of unique ingredients between BigFood and its competitors.

- Drive-through can be viewed as a different product offering as it is an alternative way of delivering the same menu while generally using similar resources.
    - Drive-through requires separate capital investment, but store-level staff view drive-through as less labour intensive and easier to serve than dine-in customers.
    - Refer to duration notes for other discussion points

Stores are required to follow head office decisions about product range, but this intended product mix does not always fit at the store level.

- Certain core offerings are available across the global network, but offerings differ among countries.
    - Reasons for differences include availability (brand of juice) and popularity (no fish burgers in New Zealand). Each franchise has the freedom to develop their own

product range and they do so by investigating international trends and other fast food chains.

- In New Zealand, all restaurants must follow the national marketing strategy as a consistent product is seen as valuable for strategic positioning and branding.
    - However, some managers note a mismatch between the required product mix and specific needs of the restaurant. Refer to yield control section above for more examples.
    - Store-level managers understand that the perspective may differ at the national level: "some stores were doing well, some stores were not doing that well. Well, this is only from what I see... the figures [at head office] might show something totally different".
    - Store-level managers provide weekly feedback to the head office. This includes discussions about the appropriate promotions to offer.

Duration

Service is the main revenue management lever at the store level.

- Store level managers have limited control over pricing, product offerings, and yield control.
    - These are determined at the national level and have a strong effect on restaurant level operations.
    - Local level promotions (e.g. student meal and lunch specials) can help encourage customer purchase predictability. This quickens preparation to and improves the rate of customer flow.

- "Service" is considered important across all stores whereas impact of marketing differs.
    - From the store-level managers' views, restaurants with more competition benefit from more marketing. Certain promotions are also more popular in particular locations.
    - A reputation of poor service is always seen to affect store performance. This spreads through word of mouth and has a delayed effect on sales: "if a store gets run badly, it doesn't reflect immediately in the sales. It only affects two or three or four months later. But the problem is that when you change it, it takes another two or three or four months to get it better".

- Store level manages are responsible for shift control and forming shift expectations.
    - Restaurant managers formulate sales projections which inform shift control. These are presented on a daily basis and broken down into half-hourly expected sales. Projections are based on the equivalent figure the year before or the average previous three weeks.
    - Shift managers are encouraged to be on the front counter to pace customer flows and kitchen outputs. However, some shift managers prefer to work in the kitchen in order to prepare meals more quickly.
    - On-shift operations are adjusted to meet demand and keep costs within prescribed limits. For example, managers may send staff home early or ask them to arrive later. They may also alter supply orders to help manage inventories.

The network formulaically controls standard operating procedures.

- National level management sets the required operational standards and oversees day-to-day process performance.
    - Consistency is seen as a key global strength. Thus, careful monitoring is in place to ensure prescribed standards are set. These include store visits, real-time review of operating times, and internal quality audits. A series of benchmarks are used to assess performance.
    - Standardised manager training provides detailed documentation of expected processes and responses.
    - Service time trends are discussed within head office and with area managers on a weekly basis.

- Restaurant managers follow a structured approach to operations management.

    - The same shift model is used across all stores, regardless of sales amount: "that means whether you are doing $80,000 or whether you are doing $14,000, this formula will fit in. It's good in the way that it means you have control."
    - One manager comments that a formulaic approach also means managers from different backgrounds can still successfully run a shift.

- Models are provided by the global network and are viewed as scientifically developed. This practice is common to fast food chains. Shift control systems are used to standardise several areas of operations.
    - On-shift processes: managers follow a list of required inspections which prompts changes. A major inspection is done every twenty minutes; a minor inspection every ten.
    - Resource allowances: manning guides detail the number of employees required for various levels of expected sales.
    - Customer-facing processes: upselling is required to be done at all times; servers are to suggest if customers would like to upgrade their meal and to ask if they would like to add other ingredients to customise their meal.
    - Kitchen-side processes: a production scheduler recommends amounts to be cooked every half hour period. Front counter registers are linked with holding units to provide real-time monitoring of usage against amounts prepared.
    - Inventory management: a spread sheet utilises sales projections and store-specific usage factors to recommend the appropriate level of food and supplies to order.

Head office operations actively manage national systems used to regulate duration.

- A restaurants improvement agenda is raised on a quarterly basis to correct identified operations problems and to find initiatives to improve service and effectiveness.
    - This is an organisation-wide search for improvements which is discussed by Operations, Marketing, and Supply Chain.
    - Examples of initiatives include drive-through changes, front counter efficiency, and kitchen layout. Some of these changes coincide with a change in management. Refer to individual sections below for more details.
    - The operations team is undertaking a review manning guides and product mix information. Time and motion studies and a review of historical sales activity will provide a basis for this.

- Service standard metrics have been changed to improve real time reporting and to circumvent gaming and improve real time reporting.
    - Previous head office operations emphasised the time taken to serve meals. However, new management has found these earlier performance measures were flawed. Customer service times could be manipulated by restaurant staff to distort the results.
    - Head office operations now track the number of customers and the average transaction value. These were chosen as they cannot be manipulated. However, some managers recognised that the measures did not provide them with the service time information they wanted.

- The operations team works with the information technology team to improve communications between employees and head office, and between customers and restaurant.

Sample initiatives: layout and equipment changes are being implemented to improve operations processes.

- Kitchen and front counter layouts are being reconfigured with a view to improving service and production efficiency.
    - Front counter layout changes include more space between registers and installing receipt printers. These seek to reduce confusion and improve efficiency.
    - New kitchen layouts facilitate greater teamwork when constructing burgers. Due to the shape of the old worktops "people don't work together there. What we're doing now is extending that one and then we're just making burgers there [a long bench]... and that saves you at least five to ten seconds per burger that you're making".

- The drive-through process is being rejuvenated to bring service times to a suitable level. Initiatives were raised to remedy the problem as well as leverage sales from drive-through.
    - Historical drive-through were found to be unacceptably long. This was informed by anecdotal evidence, observations, and data records. Anecdotal evidence told of cars turning off their engines when they entered the drive-through because they knew it would take a long time.
    - Faster service times allow more customers to be served. Too long a wait also discourages customers: "we know if there are five or six cars in drive-through, the next car will look at that long queue and go I'm not joining that, it's too long, I'm driving away".
    - New equipment has been installed to improve customer communication. Speakers were in poor condition and have been replaced. Large reader boards let customers quickly check their order, saving the need to repeat the order. Different service window layouts to fit more cars.
    - Sensors allow real-time tracking of average drive-through time. These times are displayed on a real-time basis in the head office. Head office management takes actions if drive-through service times fall below an acceptable threshold.
    - A drive-through challenge is being run to improve service times. It is aimed at improving customer flow and speed of service.

Store level managers prefer drive-through customers over dine in customers.

- Drive-through customers are considered less resource intensive.
    - These customers generate less rubbish and mess than dine in customers. Fewer staff members are required to serve drive-through customers.
    - Front counter customers are seen as being less time sensitive: "they're busy with drinks and things like that. Talking to their kids, things like that. Whereas the drive-through, the person just sits and waits for you".
    - Groups of dine in customers may share drinks, increasing the cost to the company without additional revenue.
    - Takeaway customers overlap dine in and drive-through customers. Customers ordering to take away share similarities to drive-through; less rubbish; no refills. Some customers may order to take away but choose to dine in at the store.
    - Interview findings indicate that head office operations had not provided official priorities between drive-through and dine in at the time of the interview.

- Drive-through is emphasised across all stores as part of the national focus. However, some stores have relatively fewer drive-through customers.
    - This is partly caused by the store's location: "because a lot of customers will prefer to sit and eat because they're from another town. They're from [out of town], they drive all the way. After four hours they want to sit and really eat. Our drive-through is the last in the whole of New Zealand".

There is often a trade-off between duration management and other business objectives

- Duration and consistency actively considered during the design of products and processes. This can restrict the types of new products developed.
    - Operations works with marketing to manage the operating implications of new products. These include ease of ordering and construction time. For example, setting a maximum construction time of fifty seconds on all products.
    - One manager comments that "the way that impacts me on the product innovation side of things is that we're not allowed to introduce a product that would take a minute and a half to make because you don't get the speed of throughput through the kitchen".

- Consistency, predictability, and control may be de-emphasised in favour of other strategic considerations.
    - Meals were previously made in advance but are now made to order. Previously, a production schedule report would signal the required number of each item to prepare. The production scheduler still informs the amount of food to cook ahead of time, but burgers are not assembled until ordered. The change has been in place for a few months and is seen to have a significant effect on speed of service
    - Staff rostering can be difficult during busy day parts, partly due to lumpy resources: "when you've got a two hour rush: how you do staff for two hours; is difficult."

Demand analysis

Demand analysis spans across departments and between hierarchy levels

- Head office managers are responsible for strategic and tactical analysis across the chain. Responsibility is divided by functional area. Meetings and other coordination mechanisms are used to feed analytical outputs between functional areas.
    - Marketing: brand management and tactical activity
    - Operations: process review and employee development
    - Supply chain: procurement and supplier management

- Correspondingly, there is overlap with respect to revenue management analysis.
    - Pricing: Marketing and Supply Chain
    - Product offerings: Marketing, Operations, and Supply Chain
    - Yield controls: Marketing and Operations
    - Duration: Operations and Supply Chain

- Store level managers are responsible location-specific analysis. This covers both retrospective evaluation and forward looking planning.
    - Area managers provide a weekly report on location-specific trends, explaining trends in each store's performance.
    - Restaurant managers complete sales projections for the week beginning in fourteen days. This is based on last year's sales, the previous three weeks' performance, and manager judgment. Area managers will interrogate these sales figures before they are sent to the head office.

- Head office managers feed outputs of analysis to store level managers.
    - Store level managers sometimes adjust analytical outputs based on their knowledge of local customer demographics. For example, memos are sent out for all new promotions to guide food orders and staffing levels. Restaurant managers adjust their expectations according to their knowledge of local customer demographics.
    - Store level managers have incomplete perspective about the types of analysis done at the head office level. For example, the area manager interviewed is unaware of analysis done comparing the cost of upselling (extra time) versus the additional revenue from upselling.

Analytical approach emphasises measurement and quantifiable results

- An analytical approach is prioritised throughout organisation. Where analysis is not quantifiable, initiatives are undertaken to introduce structured analysis.
    - Marketing example: tactical initiatives are introduced based on observable sales trends. These are based on actual sales, previous year's sales, and manually collected data on competitor prices.
    - Operations example: new measures were introduced to overcome staff manipulation of service times. For example, sensors have been installed to provide automated, real-time data.

- Supply chain example: distribution reports now include dollar values of more items. This allows closer investigation into the drivers of performance and costs.
- Store level example: shift control is managed using a systematic approach, consulting guides on staffing levels and the amount of food to prepare.

- Analytical sophistication depends on the problem of interest
  - Detailed spreadsheet scenario analysis is used to assess non-standard promotions. The model shows the best, worst, and most likely cases and also includes cannibalisation effects. Examples include breakfast offerings and new strategic offerings: "Any big new initiatives for the business we would model in a very sophisticated business case like that".
  - Simpler modelling is used when assessing price changes. For example, annualising the change and assuming that volumes will remain are unchanged: "okay, I'm going to take this product up from $8.90 to $8.99. That will deliver me an additional $84,000 a year if we don't drop volume by doing it".

Benchmarking and variance analysis are the primary analytical methods. Other techniques include scenario modeling and trend analysis.

- Budgets and variances inform both planned and response activity. It is used at both the head office and the store level.
  - Tactical activity is introduced when actual performance is lower than budgeted performance: "let's say it's bad sales. Marketing will come out with this coupon drop. It also attracts customers, attracts sales".
  - Budgets outline target objectives from various business activities. For example, a two percent sales increase is expected from pricing changes. This is often used to co-ordinate actions and to reconcile differences in departmental priorities.
  - Making the budget is also viewed as vital at the store level. For example, if actual performance is expected to fall short of budget requirements, there is tighter control of operations. If actual performance is expected to meet budget requirements, operations can be run with a larger safety margin.
  - When comparing store performance, managers include store differences using their experience. An example is relative volumes of each sales channel (dine-in vs. drive-through), which is understood to have different resource requirements.
  - Head office revises budgets to incorporate elements outside the manager's control such as the entry of a competitor nearby. The budget is reviewed quarterly or half-yearly and updated to match actual performance trends.

- Restaurant operation performance and processes are analysed by comparing actual results against benchmarked standards.
  - Financial performance is compared against previous years (comparable sales and last year's profit) as well as against budgets (sales and profit).
  - Head office constantly monitors drive-through service time. A display in the head office compares average service time to actual time. The operations manager visits or calls stores failing to achieve an acceptable time.
  - Labour usage compares actual usage to forecasted usage. Staffing guides currently rely on forecasted sales submitted by restaurant managers. These guides were developed using time and motion studies and average product mix information.

- Shift control is guided by a constant review of actual sales against predicted sales.
    - The shift control system provides guidance on the ideal level of operations and guides the required staff numbers and the appropriate amount of food to cook.
    - Managers use a report of actual sales versus predicted sales that is updated every ten minutes or every half hour. This is part of the operational procedures to manage a shift.
    - These reports can also be used retrospectively to review shift performance. For example, to assess staff usage.

- Historical results form the basis of many comparisons.
    - Marketing compares store performance to previous years to check if they are achieving year-on-year growth.
    - Supply chain managers use historical trends to help predict input prices in the future.
    - Store managers consider the previous year's figures a very accurate predictor of expected sales given similar operating conditions (e.g. holiday period, similar economic conditions).

- Trend analysis complements benchmarking by comparing changes over time rather than just two points in time
    - For example, using trend data to understand customer price sensitivity. Trend sheets (graphs) are used to track percentage growth in sales. Sales growth rates and customer visits are plotted on a timeline.
    - Effects of promotions and initiatives are tracked visually using graphs: "we were in growth up until August this period and then we took a big price increase and you can see what happened to our sales results immediately."

On-shift analysis uses a mix of analytical results and manager experience.

- Predicted daily sales form the basis of shift planning. It is supported by other information such as direct labour rates and ingredient usage rates.
    - Restaurant managers are responsible for entering parameters and this automatically updates a series of spreadsheets relating to different parts of shift control. This informs supply quantities, manning guides, and cooking schedules.
    - Projections are based on either last year's sales or the previous three weeks. Preferred projections depend on a store-to-store basis: "ours is a tourist spot near the highway / motorway. So for us, last year the same holiday. Let's say we're talking about Easter. Better to compare last year the same Easter so the trend should be quite the same".
    - Store level managers view the formulaic shift control approach as user-friendly and scientifically developed: "I think they do it in such a way that's so user friendly – just maybe three columns to put in: you put in your sales, your projected sales, then your one who week's usage."

- Observation is sometimes prioritised at the store-level but there is the understanding that it can be flawed.

- Managers view the overall management as formula-based. However, manager skill contributes to performance in the form of on-shift adjustments and local environment adjustments.
- When asked about needing manager expertise for shift control, one manager commented that "that is a very good guide, so you don't have to. But that can only be a guide." They went on to state that "as a Restaurant Manager you have to be very sensitive. Enough to see that the road's closed, they're repairing this, they have construction – then to make changes accordingly".
- Store-level managers acknowledge that head office analysis may reveal different results to what they observe: "this is only from what I see at this level. The figures might show something totally different".
- Head office management views that store-level managers have a good understanding of local activity but can be too focused on short term requirements: "if you asked a restaurant manager what you think your bun order is going to be for Saturday [3 days from now] they will have no idea I would suggest. Or maybe Sunday. But if you ask them what it is tomorrow, they will know".

Intuition and experience are used to analyse factors that are difficult to capture and systematically examine.

- Certain trends are difficult to analyse in detail due to unknown future events and due to the large number of possible influences.
  - For example, it is difficult to understand the effect of sales promotions and other tactical activity using high level numerical data. Managers comment that some sales of new products are to regular customers rather than new customers: "they can say yes we've sold so many of those burgers. But is it really those burgers that's bringing the people in, or would they have been there anyhow?".
  - Similarly, discounts given are used to track the effect of being part of a loyalty association. However, store level managers are uncomfortable with attributing membership with additional revenue.
  - Regarding disentangling trends and noise, one manager commented that it is "almost impossible in our business because we have so much going on that can influence sales at any given time".
  - For item promotions, marketing can look at the percentage of total sales of the promoted item. A higher than normal percentage indicates success: "We'd budget how we'd expect it to be and if we're above then we'll assume we're doing something right and if not then we'll assume we're not."
  - It is considered difficult to assess non-product-based brand work such as new mascots.

- Forecasting is considered a necessary process but is seen as imperfect: "it's a forecast. Forecasts are rarely ever going to be right; it's why they're called forecasts."
  - Supply chain maintains five years of historical data on meat prices. These are graphed and checked for trends. One manager comments that there is a "bit of an art rather than science to it. Typically it gives a much better idea than no idea."
  - Predicting actual ingredient quantity requirements is seen as a difficult process due to cannibalisation and unknown popularity of new products: "what we then need to do is

have a bit of a stab in the dark... there's a bit of an art to having a bit of a dart board and just saying this is what I think it will be".

- Certain trends are not analysed in detail as they are viewed as stable and recurring.
    - For explaining sales trends and "we don't have those sophisticated algorithms or econometric modelling that would have all those determinants in there. We have a good enough feel for our business that we can tell at a glance what's going on."

- At a store level, observation and customer feedback is used to interpret sales trends.
    - Customer behaviour and store performance are understood mainly through observation and experience, using sales figures as an indicator. Store-level managers also receive customer enquiries about the return of particularly popular products.
    - Managers observe a delayed effect on sales: "if a store gets run badly, it doesn't reflect immediately in the sales, it only affects two or three or four months later".

- Observations may be converted into analysable records to enable formal analysis.
    - Competitor actions are collected through observation then converted into formal records for use in trend analysis. Marketing managers visit competitor stores and try new products, looking at menu boards for price changes.
    - The operations manager comments that first hand observation is a vital part of his analysis. He spends three to four days a week visiting restaurants to check that operations and strategy are being properly executed.
    - Anecdotal evidence also plays a role in identifying a need for more systematic analysis.

Data types

Retrospective analysis relies on aggregates of transaction data. Aggregation is done by day (daily, weekly, or monthly) as well as by product type.

- All managers were found to use aggregated sales performance although they are used at different levels of aggregation.
    - Store level managers use a daily sales report in their regular review which summarises performance for the day.
        - It includes customer numbers, overall sales figures, and total discounts. These are compared with previous year's sales and budgets for the period. A number of performance indicators are also considered, such as food costs.
    - Marketing uses aggregated weekly and monthly performance in their regular review. These figures aggregate sales results across all stores to provide a national level review.
        - Analysis is conducted on aggregated data at the national level, but the object is to improve store-level performance: "the way our industry works is you've got to get sales growth year on year. So the same restaurant for January would need to sell more than January next year. You need to find ways and use promotions to ensure you're going to get that number of people coming into restaurants".
    - Operations benchmarks variances on a per-store basis. Part of the restaurant manager assessment is based on the actual labour and food usage against optimal standards.
        - Comparisons are also made between actual sales and profit relative to budgeted or the previous year's sales.
    - Supply chain uses national level aggregates of expected product sales and actual usage in order to ensure the right amount of inventory is procured.
        - There is more detail in store-level procurement reports than previously. These now include dollar values of more individual items: "now, everything is measurable in dollars. Those days, I don't know whether it was for convenience's sake or what. But this means you'd be able to control."

- More detailed reports with specially collected data, or more detailed data-mining, are created to inform special projects. These are less aggregated than those used for on-going review.
    - "If it's about pricing management for example, then I'd do a whole lot of specific analysis around pricing. It depends on what we're working on and what we're trying to achieve. We may create new reports that enlighten it."
    - Time and motion studies are planned in order to inform new product mix guides.
    - Percentage of sales from drive-through is now emphasised at the store level, following a directive from the head office. Store-level managers commented that there was limited analysis on the relative spending of a drive-through versus a dine-in customer. However, this can be calculated using ticket count and ticket averages

Operations departments generally use demand data at a finer level than other departments.

- A specific speed of service was previously used at the head office level and was part of store evaluations. This was collected in real-time.

- Previously, store-level managers were evaluated based on the average number of minutes taken to serve customers.
- However, this was deemphasised in favour of ticket counts and ticket averages due to observed staff gaming. The two measures are used together as one of them alone would penalise certain stores. For example, at one store there may be more customers but with smaller ticket averages, while at another store, there may be fewer customers but with larger ticket averages.
- The operations manager noted that the new measures do not provide him the service time information he wanted but were chosen as they cannot be manipulated.
- These are evaluated with reference to the previous year's figures: "if your sales improved on last year and your ticket average is improving, your ticket count is improving, then it is going well".

- The operations team regularly investigates new data types to improve operations monitoring.
  - Recently, real-time data on average time to serve drive-through has been made available. This data is automatically updated and constantly observed on a per-store basis.
  - One manager comments that data on actual construction time and resource requirements of construction would be valuable but there is currently no way of doing so on a real time basis. Currently, average product mix and average times are used when making decisions about product offerings and shift control.

- Head office managers track busy or slow periods based on full days or weeks, while store level managers also track this by day part. For example:
  - Spikes in sales figures are observed during holidays and long weekends. Viewed as coinciding with retail busy seasons. This triggers merchandising of high price point products, with value promotions removed from menu boards.
  - Slowest month is February. Differences also observed between weekends versus during the week.

- At the restaurant level, shift data is used in half-hour or ten-minute intervals. These are used to help guide shift adjustments. A range of financial data, operating data, and resource usage data are used.
  - Restaurant managers are responsible for entering initial parameters into their operations control documents. They are expected to provide projections broken down by the half hour, e.g. expected sales from 8:00 am to 8:30 am on Tuesday the 7th of September 2010 are $17.

Industry and demographic data are actively collected at an aggregate level, but not tied to individual transactions.

- A range of factors influencing demand are collected by different departments, but this information is separate from transactions.
  - Supply chain collects input price data from industry commodity information. These are used in forecasts to help marketing evaluate gross profit models.

- Marketing collects information on competitors and customer trends. This search is conducted on competitor websites and regular price checks are done by examining menu boards. Every new competitor products are tested.
- A continuous research tracker monitors qualitative performance against competitors using customer opinions. This includes opinions on affordability, value for money, best tasting burgers, and fresh food.
- Other demand sources include industry trends, macro-economic factors, international trends, research on customer preferences, and innovation sessions with suppliers.
- One use of these demand data types is to revise store level budgets to capture factors outside the manager's control. For example, at one restaurant the closure of a nearby hardware store was included in a performance review.
- Website visitors are invited to provide their name, date of birth, region, gender, mobile number, and email address to receive a newsletter.

- Industry and demographic data is observed by store-level managers, but it is not actively collected at the store level.
  - For example, managers consider store performance in light of the store's context, taking into account factors such as local demographics, nearby events, and percentage of drive-through. However, these reasons are not recorded for analysis over time. They are considered well understood and so formal records are seen as unnecessary.
  - Ad hoc observation and experiences are the main sources of this data at the store level. In-store customer feedback systems only collect responses initiated by customers. This is often collected after the transaction but can be traced to the approximate time period if necessary

Data collection

Automated systems are used to capture transaction data and operational processes.

- Shift control and point of sale systems automatically capture a range of on-shift data. These data are used during a shift and during retrospective review to track trends and perform point-to-point comparisons.
    - The production scheduler and shift control reports are linked with the front counter system and so are updated in real time.

- A dedicated information technology team oversees the automated systems. They are also responsible for facilitating communication throughout the network.
    - This involves developing user friendly software interfaces which store level managers would be comfortable using during peak hours.

- Automated systems are preferred as manual data collection is exposed to errors, gaming, and manipulation.
    - One manager comments that strategic or tactical initiatives must be able to be captured by point-of-sale systems. For example, implementing differential pricing would require more complicated programming and computer capability rather than the current standardised system.
    - Previously, speed of service was automatically collected but could be manipulated. For example, staff could immediately flag an order as being served even if the customer had not received their meal. This has been changed to ticket average and ticket count. These are also automatically recorded.
    - Automatic measurements have been introduced to track drive-through performance. The average time to serve is automatically updated in real time. It is captured through a system of five sensors built into the drive-through path.

Direct observation and experience are important sources of explanations and can trigger the need for more systematic analysis.

- The operations manager spends three to four days a week visiting restaurants. These visits reveal any operational problems which need to be investigated. Anecdotal evidence also plays a role in identifying problem areas.

- Word of mouth and location specific effects are collected by observation and first-hand experience. For example, many customers are known as regulars, with a few known by name.
    - First-hand experience informs store level expectations. Managers informally observe local demographics, customer sensitivity, speed of service, and local events. This is captured through immersion.
    - There are few formal records of these effects, although area managers submit a qualitative report alongside with weekly numerical summaries.

- Certain operational standards are difficult to measure and so require testing and experimentation. For example, construction time cannot be observed in real time and so is based on time and motion studies along with average product mix information.

Manual manager collection is needed if automated systems cannot easily collect the data.

- A key source of restaurant data at the head office level are store sales projections. This is submitted by restaurant managers.
    - Each store submits sales projections to the head office, covering the week starting in fourteen days' time. These are reviewed and challenged by area managers before submission.

- Competitor actions are manually tracked in several ways.
    - A marketing team member "goes out every month and surveys and looks at it so we always know who's done what and where." This survey includes store visits to try new products as well as look at menu boards and pricing.

- Head office managers hold focus groups with customers and with suppliers. These discuss customer preferences, innovations from suppliers, and internal brainstorming.

- Supply chain examines market monitors and manually records input prices. These are sent to marketing on a monthly basis.

- The international franchise corporation collects benchmarks and guidelines from its network and provides guides to individual franchises.

BigFood – Appendix 2: Ingredient count analysis

About the analysis

This analysis provides a count of the number of unique ingredients used by BigFood and its competitors. It provides an indication of the relative cost of menu range between different stores.

Method

Product descriptions provide the source data and these were obtained from the menus available on each restaurant's official website. This data was accessed in late 2009. Three similar fast food competitors were chosen: BigFood and two major competitors. Each product was decomposed into its base ingredients. An ingredient is defined as a distinct component which is likely to be purchased and stored separately.

Products were coded into three groups. First, core items: those forming the standard menu. Second, new items: those that have recently become regular items on the menu within the past two years or which are advertised as available for a limited time. Third, breakfast items, those items featuring on a separate menu offered during a different time.

Findings

Menu	Menu size[1]	Ingredients[2]
BigFood		
Core only	21	30
Core with Breakfast	29	39
Core with New	34	40
Full menu	42	49
Competitor A		
Core only	22	35
Core with Breakfast	35	55
Core with New	50	62
Full menu	63	77
Competitor B		
Core only	26	41
Core with New	32	51
Full menu	32	51

1: The number of menu items on offer.
2: The number of unique ingredients.

Results suggest that the BigFood menu requires fewer unique ingredients than Competitor A's and Competitor B's. This trend holds when considering the core range, breakfast range, and promotions. Ingredient counts also find that Competitor B requires the greatest number of additional ingredients for its promotions.

These results are illustrative of the approach BigFood adopts when expanding its product range. In particular, focusing on incremental additions to the menu without increasing the number of ingredients required. This suggests a relatively high level of product offerings – where fewer resources are used to create distinct products.

One refinement would be classifying the ingredients into those requiring no additional processing (e.g. pre-packaged sauces), those requiring additional processing but using existing processes (e.g. grilling larger beef patties alongside smaller beef patties), and those requiring new processes (e.g. frozen coke machines).

REVENUE MANAGEMENT

Review of current practices

SmallFood

Executive summary

This report assesses revenue management practices at *SmallFood* and identifies practices that could be used to enhance revenue. We classify the business's revenue management as *experience-based*. That is, demand-management and resource-management are informed by manager experience rather than by mathematical analysis and formalised data collection. This reflects the size of the business and experience of the business owner. A review of the academic literature has identified potential practices that could be adopted. These include a price increase for the most popular products, streamlining operations during the lunch rush, and additional data collection.

Classification

We classify your organisation as having *experience-based* revenue management:

Experience-based		Balanced		Analytical
1	2	3	4	5

Experience-based businesses are usually run under a multi-goal focus. Their business cultures emphasise quality or personal goals over analysis and profit maximisation. Pricing and product availability are reviewed when there are major shocks in the environment or when the cost of inputs increases. Demand patterns are informed by the manager's direct experience. Profit focused decisions are made using manager intuition.

Approach

We use a two-stage process to classify revenue management in your organisation:

1. We evaluated the extent to which you employed seven key activities of revenue management.
2. Scores are fed into a decision tree to classify your organisation's revenue management.

Activity scores

Demand-management

Pricing 1

Yield controls 1

Resource-management

Product offerings 2

Duration 1

Analysis

Demand analysis 1

Data types 1

Data collection 2

Figure 8: Revenue management at SmallFood

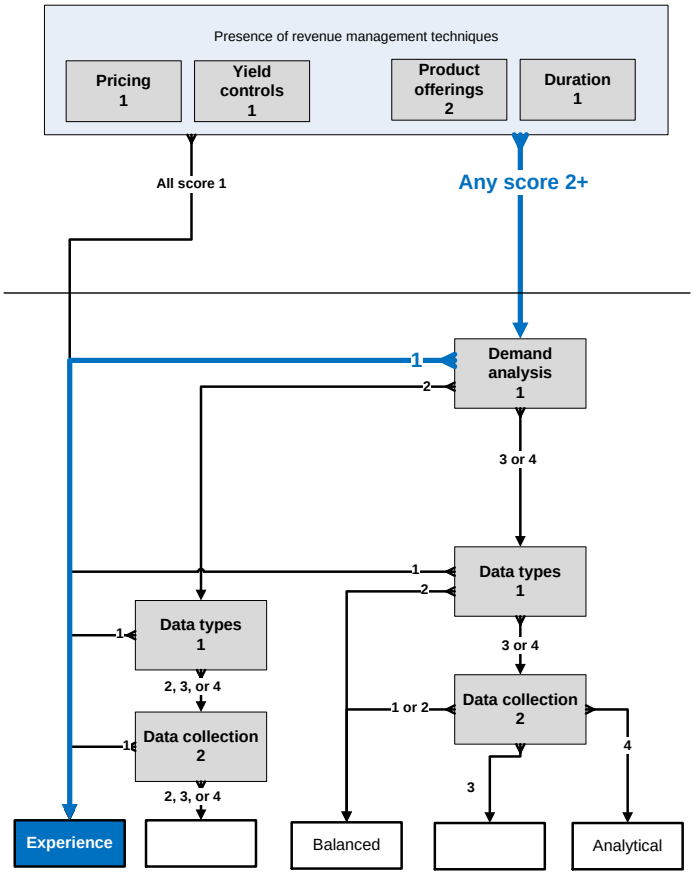

Sources consulted

Interview with owner-operator: 12th April 2010

Interview with owner-operator: 5th May 2010

Revenue management practices

Academic research finds that the following practices have been used in restaurants similar to yours.

- **Applying relatively larger price increases to the most popular products during periodic price reviews.**
    - Strong popularity suggests customers are willing to pay a higher price for the dish.
    - Applying a larger price increase during the across-the-board price increase is likely to be convenient and more understandable.
- **Offer an early-bird special between the lunch and dinner rush**.
    - Can help in shifting some customers who would dine during the lunch rush to a quieter period.
    - Encourages diners to eat when the restaurant would otherwise be quiet.
- **Offer a discount to customers who takeaway during lunch hours.**
    - Encouraging customers to takeaway can help in making more seating available.
    - Longer times to serve may be more acceptable if takeaway customers are given a discount.
- **Introduce meal deals. For example, main item with a drink and a side dish.**
    - Creates a new menu offering at a higher price point to appeal to customers willing to pay a higher price for a larger meal.
- **During lunch hours, have one cook constantly preparing popular dishes in anticipation of an immediate sale.**
    - This streamlines kitchen work at a time when it is the busiest.
    - With high customer volume, orders for popular dishes are likely to be frequent. As a result, there is likely to be little waste or loss of meal quality.
- **Consider a shorter lunch menu.**
    - This streamlines kitchen work at a time when it is the busiest.
    - Customers can still ask to order from the full menu.
- **Promote advance-ordering for the lunch period.**
    - Encourage customers to call before lunch time to leave their order and a pick-up time.
    - This streamlines front-of-house work at a time when it is busiest. Advanced-ordering can also help make customer flow more predictable.
    - Can help improve kitchen efficiency during busy periods as the kitchen can prepare the meal if there is a break in the in-house orders received.
- **Each day, keep records of total daily sales and lunch time sales.**
    - Helpful in measuring the effect of any revenue management changes.
    - Can help confirm manager expectations of demand trends.

Revenue management practices (continued)

- **Four times a year, examine the number of each type of meal over a set period, e.g. three days.**
    - Meal counts can be found from order dockets.
    - Can help confirm manager experience of trends in meal popularity.
    - Can help guide implementation of other suggestions, e.g. revealing which meals to constantly prepare.

Range of practices

We locate your organisation's revenue management through these seven key activities. Our review compares the practices found in your business against descriptions from existing academic research. Each activity is measured on a 1-4 scale; a '4' reflects *analytical* revenue management while a '1' reflects *experience-based* revenue management. This scale is designed to encompass all organisational settings and so certain practices may not necessarily be appropriate for your organisation. A summary of the interview(s) is included as an appendix at the end of the report.

Pricing

This activity assesses differential pricing in your organisation. Differential pricing is the practice of charging different prices for products / services based on what different customers are willing to pay. This helps in getting the most revenue from each individual customer.

1	2	3	4
Prices are not based on demand patterns or customer willingness to pay.	Prices reflect differences in demand across products / services.	Prices reflect differences in demand across customer types and products / services.	Prices reflect differences in demand across time, customers, and products / services.

Current practice

- Prices are mainly based on competitor benchmarking and ingredient costs.
- Prices purposefully held constant for first three years of business to encourage repeat patronage.
- No examples of differential pricing across customer types found.
- No examples of differential pricing across time periods found.

Yield controls

This activity assesses capacity reservation in your organisation. Capacity reservation is the practice of reserving products / service capacity for more profitable customers during times of high demand. This helps in maximising the revenue earned from the number of products / services provided.

1	2	3	4
Products / service capacity are not reserved for more profitable customers.	Products / service capacity are reserved for more profitable customers. These are informal guides.	Products / service capacity are reserved using formal limits. These limits are infrequently reviewed.	Products / service capacity are reserved using formal limits. These limits are regularly reviewed.

Current practice

- No examples of capacity reservation found.
- Some customers are lost during periods of high demand.

Product offerings

This activity assesses the use of product differentiation in your organisation. Product differentiation is the practice of designing your product / service range to target different customer segments. This helps the use of differential pricing and yield controls by discouraging customers from buying a cheaper product.

1	2	3	4
Business only has one product / service; or product / service range not designed for customer segmentation.	Product / service range designed for customer segmentation. Each offering requires significantly different physical resources.	Product / service range designed for customer segmentation. Different offerings are made up of pre-existing offerings.	Product / service range designed for customer segmentation. Many offerings use the same physical resources.

Current practice

- Menu items are chosen based on authenticity and for variety rather than customer segmentation.
- New products are positioned at a higher price point to existing menu items.

Duration

This activity assesses the use of duration control in your organisation. Duration control is the practice of managing the time taken (overall time and variation in time) to create a product or serve a customer. This helps the use of differential pricing and yield controls by making customers more predictable. It also helps to increase the number of customers that can be served by your organisation.

1	2	3	4
Duration control is not actively managed or focuses on entire processes.	Duration control focuses on bottleneck activities. The aim is to reduce total duration.	Operating procedures vary between busy and slow periods. Informal guides are used. Only internal activities are managed.	Operating procedures vary between busy and slow periods. Formal standards are set. Both internal and external activities are managed.

Current practice

- Operating procedures are unchanged between busy and slow periods.
- Duration controls focus on entire processes; staff aim to do the same activities faster.

Demand analysis

This activity assesses the methods used in analysing demand in your organisation. Analytical revenue management relies on statistical or mathematical models to understand customer demand. This helps in detecting patterns in demand to inform pricing, yield controls, product offerings, and duration.

1	2	3	4
No active demand analysis; or demand analysis uses owner intuition informed by experience.	Demand analysis uses owner intuition informed by general management information systems.	Demand analysis uses statistical models informed by general management information systems.	Demand analysis uses statistical models informed by specifically collected information.

Current practice

- Demand patterns are informed by direct observation and experience.
- Demand is analysed using owner intuition. No reports or decision aids are currently used to analyse demand.

Data types

This activity assesses the types of demand data collected by your organisation. Analytical revenue management relies on in-depth records of historical trends. Recording trade details, operating performance, and customer characteristics for individual transactions enriches demand analysis.

1	2	3	4
Demand data is not actively recorded. Transactions are recorded for compliance or cost control reasons.	Demand data is recorded but is highly aggregated. Only summaries are kept, combining a number of transactions.	Basic demand data is recorded for every transaction. Data provides tactical information.	Extensive demand data is recorded for every transaction. Data provides strategic information and helps improve revenue management systems.

Current practice

- Ongoing records are only kept for compliance purposes.
- When the business first started, daily summaries of item-by-item sales were kept.

Data collection

This activity assesses the way demand data is collected in your organisation. Analytical revenue management relies on accurate records of historical trends. Regular collection of transactional, competitive, and environmental demand data improves accuracy in demand analysis.

1	2	3	4
Demand data is not collected. Experience and familiarity are the only sources of historical records.	Demand data is collected manually but only infrequently or for one-off projects.	Demand data is collected manually and regularly.	Demand data is regularly collected using automated systems.

Current practice

- Experience is the main source of demand information.
- The restaurant has a computer system, but it is not used.
- Demand data records were kept at the opening of the business and for new products
- Sales numbers are recorded for new products to decide whether or not specials should be included on the main menu.

SmallFood – Appendix 1: Interview summary

Pricing

Prices are mainly benchmarked against competitors

- Prices were chosen based on comparisons with competitors before the store was opened "I will check other places, how much they sell. We get the rough figure, then we can come up with our own price".
- Compared to competitors serving meals of equal quality, the owner chose to set prices fifty cents to one dollar lower. He was comfortable maintaining a price premium over lower quality meals.
- In the third year, prices will be raised by $0.50 to $1.00. Products that are cheaper than competitors will be raised by the full amount.

Pricing incorporates ingredient cost, but not labour cost

- New items are priced one or two dollars above the average price of current menu items. This reflects higher costs of the new items – larger portion sizes and higher quality ingredients.
- For example, a $10.50 char kuay teow has two prawns. A recently introduced dish, $12.50 for sambal prawns, contains more prawns and is a larger portion than the char kuay teow.
- Prices do not reflect differences in time taken to prepare.

Prices are held constant to encourage repeat business

- The owner acknowledges that his prices are low, with menu prices unchanged since the opening of the business; "$10.50 is actually about ten to fifteen years ago price."
- This is done to encourage customers to return to the restaurant. His plan is to revise the prices in the third year of operation, once customers have become accustomed to dining at *SmallStay*.
- "So next time, if I increase one dollar, it's okay – I love the char kuay teow, I want to eat the char kuay teow – that's my marketing strategy. This reflects the dominance of students "I don't want them to feel that I am out to make money".

Discounting is discouraged

- The owner's view is that it should only be done when overall business is poor. "I don't believe in doing that [discounting] unless your business is poor… then you attract people by giving discount".
- A discount is given to members of a student union "just to support them". This is the only student group he gives a discount to.
- For catering, discounts are calculated on a case-by-case basis, up to a ten percent discount

Yield controls

Capacity is not reserved for customers with higher willingness to pay

- During periods of high demand, the number of customers exceeds the restaurant's capacity.
- He has had to turn some of these customers away due to lack of space. "Sometimes Friday, you're so busy. I have seen I lost about ten to fifteen customers because there's no space." Following a recent advertising campaign, the owner has found that the number of non-student (higher willingness to pay) customers want to dine.
- The owner does not want to reserve capacity. Orders are served on a first-come, first-served basis.
- He would like to serve more non-students, but has found that the new customers arrive at the same time that students too. "I still want to cater for the new customer, not only the students. But I can't afford, you know what I mean, because I don't have space.

Product offerings

Customer segments are identified, but that is not considered when choosing product offerings.
A variety of products are offered

- The restaurant initially offered 17 printed menu items. This includes a range of noodle soups, fried noodles, and dishes served with rice.
- Over the two years of operation, 14 new items were added to the printed menu.

Limited evidence of product range being linked to customer segmentation

- New products are positioned at a higher price point to existing menu items. That is, new items will be one or two dollars above the average price, with the premium price being matched with higher quality and bigger portions.
- However, the manager does not conduct market research to check if a dish will be popular.
- Products are chosen based on the owner's experiences with Malaysian cuisine and what he expects will be popular: "the Malaysian students, they're going to miss it. This is popular in Malaysia."
- He places a strong focus on serving genuine Malaysian food that is "not blanded to the Kiwi taste". This does reflect an emphasis on the Malaysian/Singaporean student segment "you can probably bluff a new person, but for a person who has tasted, he'll come back, he'll try it once, then won't come back."
- The menu is the same over lunch and dinner. He had initially planned on offering an expanded dinner menu with a view to bring in more customers. However, this was rejected. The owner considered an expanded dinner menu to be linked with fine dining, which he did not believe students could afford.

Product differentiation occurs through specials and items at different price points

- This menu was expanded slowly over the years by introducing new items as specials. 2 or 3 items would be introduced at a time which would become part of the printed menu if they proved popular.
- A Sunday special is currently being trialed. If it is successful, the manager plans to implement a day-of-the-week special. The main reason for offering more items is to give the customers more choice.

Duration

Case notes

- The manager recognizes that faster service is needed during busy periods. “If it’s really, really busy (so it’s all full house), we try to serve them quick and make sure that the one who’s eaten finish go, then another group.”
- However, operating procedures remain unchanged. Instead, waiting staff perform the same set of procedures faster and more waiting staff are used.
- For example, the manager indicates that suggestive selling done during both quiet and peak periods. Customers are always suggested new products. Regular customers are reminded of extra side dishes or drinks they usually order.
- There has been no formal study of how customer duration varies between quiet and peak periods.
- During busy periods, the bottleneck is the kitchen. The owner estimates that during quiet period, dishes can be prepared in as quickly as five minutes. It takes fifteen to twenty minutes during peak periods.

Demand analysis

Broad patterns on peak and slow periods have been found from experience

- Demand is lower during school holidays. The owner has found that there is about a 20 to 30 percent drop in customer numbers during the mid-term break and other university holidays.
- During the summer holidays, he experiences a fifty percent drop in customers.
- During peak periods, the manager recalls there are about fifty customers.
- He estimates that about ten to fifteen customers are lost during this time due to a lack of space. This mainly occurs during lunchtime, with the owner explaining that workers only have a short time period for lunch. Customers coming for dinner are spread out.

Trends are identified using comparisons

- At the start of the business, the owner says “… when I started, I record how many of these sold today and compare daily... we always compare how many we sell today and things like that.”

Demand is analysed using owner intuition

- No reports were kept to confirm the regular, broad trends.
- No decision aids are used to track changes in trends.

Market research is not conducted on the projected sales of new products. “I know through experience and through the knowledge of food. I know that these are the food that is popular in Malaysia. Definitely will be a great eat to the Malaysian students.”

Data types

Ongoing records are only kept for compliance purposes.

- An external accountant is hired for GST and end of year reporting
- Customer numbers are not recorded
- Market research is not conducted on the projected sales of new products

Previously, this indicator would score 2 – Demand data is collected, but highly aggregated

- As identified previously, the manager used to keep daily trend data when the business first opened.
- Daily sales numbers were recorded without detail on the time of purchase – "when I started, I record how many of these sold today and compare daily."

Types of demand data to track

- Daily peak periods – Lunch rush, no dinner rush
- Seasonal slow periods – School holidays
- Order data: Item ordered, total price, table number, and takeaway.
- No record is kept of the time the order was put in.
- Customer segments – Students, workers

Data collection

Experience is the main source of demand information.

- Many references are made to the use of experience, with no supporting data records, to track seasonality, customer segments, competitor pricing movements, and duration.
- The owner believes his regular, front-line experience provides him with enough data. "…I don't keep any record because I'm the only one – I serve so I know how many I sold."
- "This is just a small family business. We tend to know the operation in and out and we know what we are doing. So we don't need to keep all this data."
- For periods where the owner is not at the restaurant serving, he checks with his daughter what sales were like for that day. This relies on her experiences that day, rather than a formal record.
- From his experience as a fast food operations manager, he feels that thorough records are only useful when the manager is not in the front lines. "Unless I'm just a boss who's sitting up in the office and make sure they record for me how many, how many, how many… If you're operating by remote control, probably you'd like to know how many plates of char kuay teow you sell today or how many bowls of laksa you sell today."
- The restaurant has a computer system, but it is not used.
- When asked, the manager said he was satisfied with the information he receives and did not believe any improvements are necessary.

Demand data records were kept at the opening of the business and for new products

- At the start of the business's operations, the manager used to keep daily trends of the number of each dish sold. Nowadays, records of regular menu items are not kept. "I used to, but I don't do that these days… earlier when I started, I record how many of these sold today"
- Sales numbers are recorded for new products to decide whether or not specials should be included on the main menu. "Unless it is a new one, I generally just check 'okay, today I sold how many, yesterday I sold how many. That sort of thing."

REVENUE MANAGEMENT

Review of current practices

Retailer

Executive summary

This report assesses revenue management practices at *Retailer* based on a series of interviews with managers and staff. We classify the business's revenue management as *balanced with an experience-based emphasis*. That is, demand-management and resource-management are informed by a combination of manager experience and analytical outputs with formal data collection. This reflects the organisational structure and business strategy. A detailed summary of the interviews grouped by theme is also presented.

Overview

We classify your organisation as having balanced revenue management, emphasising experience:

Experience-based		Balanced		Analytical
1	2	3	4	5

Balanced businesses make profit focused decisions using a mix of manager experience and analytical outputs. Pricing and product/service availability are reviewed regularly, with adjustments made depending on how busy the business is expected to be. Revenue management decisions are made using manager judgement, informed by a review of historical trends and his/her expectations about future trends.

Approach

We use a two-stage process to classify revenue management in your organisation:

1. We evaluated the extent to which you employed seven key activities of revenue management.
2. Scores are fed into a decision tree to classify your organisation's revenue management.

Activity scores

Demand-management

Pricing 2
Yield controls 3

Resource-management

Product offerings 2
Duration 1

Analysis

Demand analysis 2
Data types 3
Data collection 2

Figure 9: Revenue management at Retailer

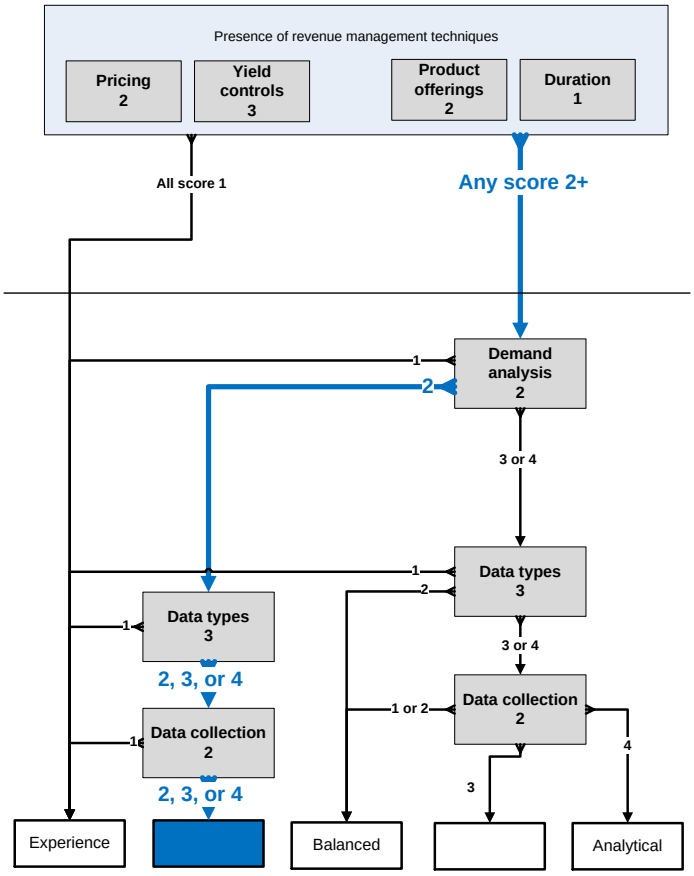

Sources consulted

The following sources were used in examining revenue management in your organisation.

Interviews:

- Owner-operator – General manager
- Owner-operator – Financial controller
- Buyer

Documents sighted:

- Sticker-based markdown instructions
- Letter code pricing spreadsheet

Other sources:

- Company website

Range of practices

We locate your organisation's revenue management through these seven key activities. Our review compares the practices found in your business against descriptions from existing academic research. Each activity is measured on a 1-4 scale; a '4' reflects *analytical* revenue management while a '1' reflects *experience-based* revenue management. This scale is designed to encompass all organisational settings and so certain practices may not necessarily be appropriate for your organisation. A summary of the interview(s) is included as an appendix at the end of the report.

Pricing

This activity assesses differential pricing in your organisation. Differential pricing is the practice of charging different prices for products / services based on what different customers are willing to pay. This helps in getting the most revenue from each individual customer.

1	2	3	4
Prices are not based on demand patterns or customer willingness to pay.	Prices reflect differences in demand across products / services.	Prices reflect differences in demand across customer types and products / services.	Prices reflect differences in demand across time, customers, and products / services.

Current practice

- New products are first priced at cost plus. The price is adjusted for popularity when the product is restocked.
- Secondhand items priced at equivalent new value rather than at cost.
- Some evidence of differential pricing by customer segment; this is in the form of a club member program.
- Competitor activity and industry standard affect profitability but are not emphasized when setting prices or selecting tactical activity.

Yield controls

This activity assesses capacity reservation in your organisation. Capacity reservation is the practice of reserving products / service capacity for more profitable customers during times of high demand. This helps in maximising the revenue earned from the number of products / services provided.

1	2	3	4
Products / service capacity are not reserved for more profitable customers.	Products / service capacity are reserved for more profitable customers. These are informal guides.	Products / service capacity are reserved using formal limits. These limits are infrequently reviewed.	Products / service capacity are reserved using formal limits. These limits are regularly reviewed.

Current practice

- A try and see approach is used to incrementally move prices of new product. This is based on speed of stock out.
- Secondhand items cannot be easily restocked. Accordingly, a try-and-see approach based on cost plus is not appropriate.
- Business model of small, frequent orders determines the appropriate yield control methods.
- Yield control methods are chosen to balance the cost of processing stock and the benefit of price movements.

Product offerings

This activity assesses the use of product differentiation in your organisation. Product differentiation is the practice of designing your product / service range to target different customer segments. This helps the use of differential pricing and yield controls by discouraging customers from buying a cheaper product.

1	2	3	4
Business only has one product / service; or product / service range not designed for customer segmentation.	Product / service range designed for customer segmentation. Each offering requires significantly different physical resources.	Product / service range designed for customer segmentation. Different offerings are made up of pre-existing offerings.	Product / service range designed for customer segmentation. Many offerings use the same physical resources.

Current practice

- Retailers face a very wide product range, spanning many formats and genres. Business strategies determine which products to stock from the wide range.
- The organisation's business model has evolved from an op-shop, 'discovery' experience towards a deep-catalogue, 'comprehensive' experience.
- Business model is centered on secondhand trade-ins. This encourages customer loyalty and provides high-margin inventory.
- Disadvantages of secondhand trade-ins are the inability to control what stock arrives from customers as well as very high processing costs.
- New product and special orders are used to encourage trade-in.
- Working capital cost of maintaining a deep catalogue is controlled using small order sizes. This may require more staff costs than if larger orders were used.
- Cost of certain promotions and products is prohibitively high due to nature of the market and customers.

Duration

This activity assesses the use of duration control in your organisation. Duration control is the practice of managing the time taken (overall time and variation in time) to create a product or serve a customer. This helps the use of differential pricing and yield controls by making customers more predictable. It also helps to increase the number of customers that can be served by your organisation.

1	2	3	4
Duration control is not actively managed or focuses on entire processes.	Duration control focuses on bottleneck activities. The aim is to reduce total duration.	Operating procedures vary between busy and slow periods. Informal guides are used. Only internal activities are managed.	Operating procedures vary between busy and slow periods. Formal standards are set. Both internal and external activities are managed.

Current practice

- Customer behavior is relatively stable in a retail environment. Accordingly, fewer duration controls are needed.
- The secondhand, deep catalogue strategy introduces some variation in customer behavior. Processes have evolved over time to offset these variations.

Demand analysis

This activity assesses the methods used in analysing demand in your organisation. Analytical revenue management relies on statistical or mathematical models to understand customer demand. This helps in detecting patterns in demand to inform pricing, yield controls, product offerings, and duration.

1	2	3	4
No active demand analysis; or demand analysis uses owner intuition informed by experience.	Demand analysis uses owner intuition informed by general management information systems.	Demand analysis uses statistical models informed by general management information systems.	Demand analysis uses statistical models informed by specifically collected information.

Current practice

- Generally, analysis and decision-making are based on manual analysis and manager intuition. Standardised rules or computer programs are deemphasised.
- Overall, there is a strong reliance on automated records to provide decision support. However, the reliance on records changes depending on the decision at hand.
- Rate of sale is the main performance indicator at the item level. This effectively means a trial and error approach is used when analysing demand.
- Comparisons are used to assess the performance and popularity of different genres and media formats. A full review is done every one or two years.
- First-hand manager involvement is used to understand the varied customer base and to detect industry fashions.
- Purely computational analysis is avoided as staff believe it slows reaction time and can cause unrealistic outputs.
- Some potential areas for analysis are simplified or ignored due to cost.
- Some potential areas for analysis are simplified or ignored due to a mismatch with the business model.

Data types

This activity assesses the types of demand data collected by your organisation. Analytical revenue management relies on in-depth records of historical trends. Recording trade details, operating performance, and customer characteristics for individual transactions enriches demand analysis.

1	2	3	4
Demand data is not actively recorded. Transactions are recorded for compliance or cost control reasons.	Demand data is recorded but is highly aggregated. Only summaries are kept, combining a number of transactions.	Basic demand data is recorded for every transaction. Data provides tactical information.	Extensive demand data is recorded for every transaction. Data provides strategic information and helps improve revenue management systems.

Current practice

- Transaction records are kept at the individual transaction level. Managers often use this data at the item-level or batch-level.
- Some detail on secondhand items is not recorded due to the nature of the trade-in approach and processing required.
- Detailed transaction level demand data is available for club members but only aggregated information is used in analysis. No such information is available about non-club members.
- Internal activity, rather than external events, is the main source of product popularity data.

Data collection

This activity assesses the way demand data is collected in your organisation. Analytical revenue management relies on accurate records of historical trends. Regular collection of transactional, competitive, and environmental demand data improves accuracy in demand analysis.

1	2	3	4
Demand data is not collected. Experience and familiarity are the only sources of historical records.	Demand data is collected manually but only infrequently or for one-off projects.	Demand data is collected manually and regularly.	Demand data is regularly collected using automated systems.

Current practice

- Day-to-day transaction data is collected automatically. This also updates member purchases data in real time.
- Manual processing is needed to update the inventory management system. This can be very time consuming.
- Industry trends, competitor actions, and environmental shifts are not formally recorded. First hand observation is the main way of collecting this information.

Retailer – Appendix 1: Interview summary

Pricing

New products are first priced at cost plus. The price is adjusted for popularity when the product is restocked.

- New products are priced at a cost plus.
    - One manager comments: "Our pricing is very basic for new product. For new product, it's generally based on cost – cost plus obviously – for that category of the business. Whether it be DVDs, music, or clothing, or books."
    - Any new release discounts are offered by distributors and other suppliers rather than negotiated by the organisation.
    - This practice is common in certain industries which use standard pricing.
    - Pricing for special orders are also cost plus. There is no finder's fee or special order charge.

- At the time of reordering, product prices are adjusted according to the demand trend observed.
    - "If somebody was touring and we get one of their items in, we try it at a bit higher than we normally do. Or if they've just died. That sort of thing."
    - Refer to the Yield Controls section for more discussion.

- The use of cost plus pricing for new product reflects the organisation's business model as a secondhand trade-in store.
    - Accordingly, there is less emphasis on achieving high margins or high volume for new product.
    - Distributor pricing passively captures industry trends: "generally it's your distributors that are setting that [prices]. They'll move this chunk of the DVD catalogue to mid-price or to budget. Or they'll do the same in music. Our cost price has changed, so if we're going to order it our sell prices change".

Secondhand items priced at equivalent new value rather than at cost.

- Secondhand prices are based on product popularity, categorised as either high value or low value.
    - This stock is restored and guaranteed to an equivalent new standard: "It will look brand new and it will be fully guaranteed."
    - Accordingly, they set prices according to the equivalent new value: "So the pricing of that depends on what the new cost is and how good a seller it might be."
    - High value items are priced and treated individually: "Prices of higher value secondhand items are based on sales histories using simple but flexible rules."
    - Low value items are put into letter codes for mass pricing. They are put into one of several bulk categories. These are items "that we've either got too many of; or that are possibly not going to sell quickly; or maybe in some cases are not in very good condition".

- Secondhand pricing reflects their relative scarcity compared to new items.
    - A direct example is items which are no longer in circulation: "Bootleg tapes and bootleg LPs that used to sell for half the price of a new one – which we now can get twice the price of a new one for because they're collectible."
    - For items in current circulation, the opportunity to obtain them at a much lower cost is scarce. One manager comments: "Fortunately most customers do not have a high regard for the value of items they no longer want."

- Higher markups also reflect the relatively high cost of preparing them for sale.
    - One manager comments: "A secondhand item is more like a raw material than it is a product."

- Higher markups provide flexibility in introducing tactical activity.
    - A regular promotion offers customers double loyalty points on trade-in items. This helps customers earn discounts at a faster rate.
    - The store benefits from the greater inflow of trade-in stock as well as greater customer numbers.
    - One manager comments that the cost of this promotion is far lower than the benefit: "We can pay 50 percent more on the cost price, but as a percentage of the sale price it might only be a 15 or 20 percent increase. So by offering a 10 percent better price for your trades, the customer is getting incredible value but the cost to us isn't that great. It's nothing like giving a 10 percent discount on the sale price."

Some evidence of differential pricing by customer segment; this is in the form of a club member program.

- Club members are effectively offered a 10 percent discount on purchases. They are also offered special promotions.
    - All customers buy products at the same price, whether members or non-members.
    - However, member purchases are recorded to their account. They receive a discount each time they accumulate a set value of sales.
    - One manager comments: "We deliberately chose not to just do a club member discount but to do a club member bonus. Because I believe that if you're making a purchase and you're told you have to pay $20 less because you've reached a trigger point that that's much more valuable than merely dropping the price by 10 percent. It's a reward. It's operative conditioning really."
    - There is a $5 fee to join the membership program. This covers administrative cost and helps filter out non-repeat customers.

- Additionally, loyal customers are given comparatively more for trade-in than one-off customers.
    - This reflects the need to maintain a profitable average payout for trade-ins: "If we want to give our best price to our best customers, then we've probably got to pay a little bit less to people we don't think we'll ever see again."
    - One manager comments: "If we get somebody coming in and we say to them why are you selling your CDs?; and the guy says 'I've had with New Zealand, I'm off to

Australia. I'm never coming back here again', then obviously we would want to get those CDs at the minimum price."

Competitor activity and industry standard affect profitability but are not emphasized when setting prices or selecting tactical activity.

- Direct price competition is avoided at the organisation as managers feel it is more profitable to attract customers through other means.
    - There is no or very little emphasis on competitor pricing: "If somebody sells something for $10 less than us, we just find a way of making $10 seem attractive to people."
    - The secondhand business model encourages stable sales even if prices are relatively higher: "If they go 20 bucks and we go $29.95, then we'll sell five of them no matter what price they've got at $29.95. We're not thinking shit, are we going to sell 500 or 1000 of those? It's not going to happen anyway."

- Role of new products changes depending on the business model.
    - Independent record store: new products are the main revenue stream. Loss leader pricing from big box retail has made this business model unprofitable.
    - Big box retail: new products can be loss leaders to encourage customer numbers (e.g. Competitor A while building DVD line). They may also be a strong revenue stream (e.g. Competitor B).
    - Secondhand: new products support the secondhand arm of the business. Used to encourage customers to trade-in stock.

- Unlike certain competitors, product or sales promotions are rarely run as they are prohibitively expensive.
    - Few product promotions: "We don't usually promote products unless a supplier is advertising it, and that is seldom."
    - Few holiday period sales: "Very often we've actually had a sale and we've turned over less than we normally do."
        - One manager comments: "We don't do a lot of Mother's Day or Father's Day sales or anything like that. The problem with it is that we might increase our sales on that day by 20 percent if we're lucky. But the cost of marketing is two to three times what the increase in sales is."
    - Sales may be held for brand image: "We have a few of our own special days – Record Store day obviously."

Yield controls

A try and see approach is used to incrementally move prices of new product. This is based on speed of stock out.

- Prices of fast moving products are moved upwards when the item is next restocked.
    - One manager comments: "If it sells really quickly – like in less than a month or if the last one sold in less than a month – then we'll put the next one up at a couple of dollars more."
    - One outcome of this approach is that upward price movements are faster than downward price movements.

- Prices of slow moving items are reduced during periodic stock reviews.
    - Items on shelf for more than three months are marked down to encourage a sale. It is marked down again if on shelf for six months, and again at nine months.
    - "If something gets marked down three times, we don't bother trying it again; at least, not for a couple of years".
    - Markdowns are applied using a $5, $10, or $15 discount sticker according to a table of discounting rules.
    - Once prices drop below a threshold, the item is moved to bargain bins.

- Each review covers products that are either four or six months old. This varies depending on the time of year.
    - Pre-Christmas – four month: "we need to get the bins relatively empty, get that stock moved quickly so that we can replenish with the November purchases when we start to increase the depth of our catalogue".
    - Post-Christmas – six month: "we don't want to be marking down too much of the better stuff that had arrived. We're not replenishing our stocks to the same extent so we can afford to let stuff stay on sale for a bit longer".

Secondhand items cannot be easily restocked. Accordingly, a try-and-see approach based on cost plus is not appropriate.

- Compared to new products, it is harder to move secondhand item prices upwards if they prove to be popular. Accordingly, it is more important to get the initial price correct.
    - One manager comments: "We do not have duplicate stock with which we can replenish so we must get the best price."
    - Secondhand items are split into two price categories – high value and bulk.
    - High value secondhand items are listed at the same price as equivalent new items, rather than at cost plus.
    - Markdowns follow the same process as new products.

- Bulk secondhand items follow a price skimming approach, where items are effectively 'Dutch auctioned' over several weeks.
    - These items are released into batches, with each batch starting at either $15 or $10. All items within each batch have the same price – they are marked down as a group.

- A formulae approach is used to mark down bulk secondhand items: "Prices on the letter-coded Dutch auction product are typically dropped when the sales of that code reach less than 5 percent of the total number on-hand in the week prior."
- This is reviewed weekly – comparatively more often than new stock and high value secondhand items.
- Prices are marked down in $2 increments. For example: "These [one batch] have been out for a couple of weeks. The cream has been taken off by the customers. So these are now going down to $12"

Business model of small, frequent orders determines the appropriate yield control methods.

- Small order sizes are used to maintain a wide product range while minimising working capital requirements.
  - This model offers a natural opportunity to adjust prices and to control the amount sold at a discount price: "If you buy 10, [our buyer] will know every day if we've sold one of them or we've sold nine of them."
  - Yield controls are also less important when compared to larger order batches. This is because fewer units are 'wasted' if buyers incorrectly estimate product popularity.

- With large purchase sizes, predictive analysis becomes important.
  - One manager comments: "It's very different when you've got one store and you've got buyers that are looking at what's happening on a daily basis."

Yield control methods are chosen to balance the cost of processing stock and the benefit of price movements.

- For low value stock, price changes are done on batches rather than individual units.
  - Quantities are very high and the benefit of individual price movements is low.
  - One manager comments: "There are 17,000 CDs in that column [batch] alone. If we had to go and manually change the prices of those items every week, that's an enormous amount of work."
  - Batch yield controls minimise the time taken to re-price items: "Fifteen minutes work to change the prices in the system; change the prices on the sign template; print the signs; and put them out in the shop."

- For high value stock, price changes are done on individual units.
  - Quantity is still very high but the benefit of individual price movements is greater.
  - Sticker re-pricing method is used to quickly identify and markdown older stock.
    - For each round of markdowns, managers provide staff with a list of item codes which need changing. For example, items with codes 57XXXX need a discount applied.
    - "We can go through the whole shop in two days with about four people. We do it about every two months."
  - Adjusting prices at the time of restocking is time consuming. However, buyers need to pay attention to each product at the time of restocking. Consequently, the incremental cost is lower.

Product offerings

Retailers face a very wide product range, spanning many formats and genres. Business strategies determine which products to stock from the wide range.

- Summary of product categories in the entertainment industry:
  - Media formats: Vinyl, CD, DVD, Blu-Ray, and books.
  - Gaming formats: Playstation, Xbox, and Wii.
  - Accessories and other: t-shirts, posters, flags, gift vouchers and concert tickets.
  - Products span a range of customer categories.
    - New and secondhand items. Different genres and countries.
    - High and low price points.
    - 'Mainstream' and collector's items.

- Industry product breadth is driven by market characteristics.
  - For example, the music industry has an exceptionally wide range of unique products.
  - Additionally, suppliers often pitch new releases towards different markets. A song or movie may be released as a deluxe or standard version. It may also be re-released as a bundle of titles, re-mastered, etc.

- Depending on their strategy, businesses stock a broader or narrower proportion of available products.
  - The organisation runs a "deep catalogue", stocking an extensive set of products.
  - One manager comments that The Warehouse was originally a 'Top 40 store", but have since expanded their product range.
  - One manager comments about another competitor, Competitor B: "They're pretty much in between. They do loss leaders to match Competitor A and they carry probably half the range that we carry to match the depth of our range."

- The organisation's range of product formats is stable, although the attention given to each format changes over time.
  - One manager comments: "As far as format ranges are concerned, we have not altered these since the advent of DVD."
  - However, shop layout is altered based on relative popularity of each format.
    - For example: "Sales of recorded new music, and of movies, are diminishing so we need to look at other formats and product ranges."

The organisation's business model has evolved from an op-shop, 'discovery' experience towards a deep-catalogue, 'comprehensive' experience.

- The organisation was originally a secondhand only store.
  - One manager comments: "This business, as far as music and movies, is about being a place of discovery. It's where people can fossick through and find stuff and be surprised".
  - Target market is a niche set of customers: "Deep catalogue stuff is for people who are actively exploring music."

    - This environment of discovery and opportunity shopping has survived throughout the life of the organization.

- Focus has developed towards offering a comprehensive range of stock: "We need to have anything that anybody is likely to ask for."
    - Over the years, more and more new product in order to support the secondhand items.
    - "If someone came to [us], they could have a very good chance to find what they wanted. If they traded music in on a credit note wanting to buy new music, then they'd have a very good chance of being able to buy what they wanted."
    - This is also supported by special order processes: "you come into the store and there's something you can't find and you come to one of our staff at the counter and say: have you got this or can you get it?'

Business model is centered on secondhand trade-ins. This encourages customer loyalty and provides high-margin inventory.

- Secondhand items make up a significant part of the business: "Almost half of our sales are of secondhand items."
    - Almost all items are invited for trade-in. These may be single items or large collections. Items in poor condition or where there is excess inventory can still be traded-in but at a lower price.
    - Customers receive either a credit note to use at the organisation or a cash rate of 50 percent of the trade value for fast selling items.

- Payment through credit notes helps retain customers as the credit cannot be used elsewhere.
    - One manager comments that if "I give you a $200 credit note, it doesn't matter what [Competitor B] are selling their CDs for. You've got a $200 credit note that says [*Retailer*]. Doesn't say [Competitor B]."
    - This encourages customer loyalty: "They're a captive. That's why it's important for us to keep trading from the public."
    - Further, a lot of secondhand is originally from competitors, where one manager notes "a lot of it will come back through here and we'll make money on it."

- Customers trading-in items do so at a price much lower than original purchase price. The organisation therefore gets the opportunity to stock high value items for a low cost price.

Disadvantages of secondhand trade-ins are the inability to control what stock arrives from customers as well as very high processing costs.

- Secondhand items are obtained by chance and certain items cannot be easily restocked.
    - For example, some customers trade-in items in defunct formats: 12", tapes, and videos.
    - Accordingly, one manager comments: "We need to preserve prices so that secondhand items are sold at true value."

- Secondhand items require a lot of human processing to input individual title records, set prices, and refurbish the product for on sale.

- Refurbishments require a guarantee and sometimes need re-casing or re-surfacing. Re-surfacing requires expensive, specialised equipment.
- A high margin is therefore required to offset this cost: "The margin that we put on secondhand stuff is very, very high as a reflection of the overhead cost of dealing with them."

New product and special orders are used to encourage trade-in.

- These bolster the product range to make trading-in more attractive than selling for cash elsewhere.
    - One manager comments on the role of firsthand stock: "Supporting that business with a catalogue of new music, new DVDs, new LPs (well music is CDs and LPs – books, magazines, etc.) is part of providing that retail environment to encourage the trading and the buying of secondhand music."
    - Hence, there is a simple approach to pricing new stock. Refer to Pricing section for more discussion.
    - New product can also be used as loss-leaders to drive customer numbers: "Maybe we might sell a hundred of them a $9.95 and make no money. And that's fine ultimately because that's what I talked about at the start. We may choose to do that because it's not going to affect the margin stream."

- Special orders are taken if a customer wants something that isn't in stock: "people will know that if we haven't got it, we'll get it".
    - This service has been available for a long time and so a regular process has been developed to search local and international suppliers.
    - Special orders also prompt buyers to potential new products: "The buyer will often order a second copy based on the principle that if there's one person out there that wants it, there may be another; and it's worth holding up a copy for six months in the shop until someone buys it."

- However, special orders are resource intensive, requiring staff attention at several points.
    - At request: collect product details and customer contact information.
    - Search: buyers search through existing supplier catalogues. Customer may be called to confirm the item is what they want.
        - This search may be based on relatively vague criteria: "If they come in and they want a CD with a particular song on it, which happens a lot, we can find that song and find a CD that it's on."
    - Received: item details updated in inventory management system. Customer called to arrange pick up.

Working capital cost of maintaining a deep catalogue is controlled using small order sizes. This may require more staff costs than if larger orders were used.

- Problem is the tradeoff between the additional revenue and cost of having a wider stock range.
    - One manager comments: "The catalogues and the volume of new stuff that is coming out of our industry is vast. So whatever you do, if you want to try and filter that and

provide a content rich experience whether it's online or in store, is challenging. It's not inexpensive."
    - However, there is value in having physical rather than online stock: the "difficulty with buying online is that you can't handle what it is that you're buying. That's fine if it's a toaster. You can flick through the pages of a book on some websites like Amazon and have a look at it. But there's no substitute for picking it up, looking at it, and just starting to read a paragraph".

- The goal is to provide a deep product range at the least cost. This is done by restricting purchases to what can be sold in one week.
    - One manager comments: "Our buyers of new product do not work to budgets or open-to-buy systems. They have always been told to order what they think we can sell in one week."
    - Approach is to buy one, sell one, then restock one: "All new items that are sold fall into a draft purchase order and our buyers make judgements on re-ordering daily."

- Working capital is the main constraint on the product range.
    - One manager comments: "We could no doubt sell more if we offered more but don't have the available funds to do so."
    - Accordingly, the focus is on "maximizing potential" rather than meeting all demand. Product depth is somewhat sacrificed based on working capital, but small order sizes provide a workaround to the limitation.

- Small order sizes reduce the cost of stocking unpopular products.
    - Even if there is only one customer, all copies of that product are sold: "High demand is seldom a problem when a lot of our stock items are single copies – thus one customer constitutes high demand for those items."
    - Accordingly, there is less emphasis on turnover of specific products: "it's fine to have something that has a stock turn of once every two years if you only get it in once every two years and you get it in at the right time".

- Contrast this with large order sizes where the cost of poor decisions is much higher.
    - One manager comments about the risks of centralized buying in a large chain: "They had a row of CDs in bins – so would've been about 2,500 titles – that were sung in Spanish. Because they had just taken their standard stock list from a new American rollout and applied it here."

- Small order sizes also lets the organisation cater to niche markets.
    - One manager comments: "For a book distributor to choose to carry a title, they would want to be pretty well assured of selling 100 or 200 copies."
        - "We'll quite happily sell all of the books in New Zealand that would only ever sell three copies. There might only be three New Zealanders that want to buy that book but we've got it and we'll sell it to them. Because it's not worth the distributors doing."
    - This is achieved by ordering direct from parallel imports and sourcing directly from one-stop shops. They do not use distributors as they impose high minimum order sizes.

Cost of certain promotions and products is prohibitively high due to nature of the market and customers.

- Censorship regulations forbid the sale of international DVDs on the organisation's website.
    - "You can't import a DVD into New Zealand and offer it for sale to you without having a New Zealand rating on it."
    - "We did have Zone 1 DVDs if we bought them for the store and we had them rated and put stickers on them."
- The organisation does not regularly offer product recommendations to loyal customers.
    - Recommendations are normally expected to increase demand for existing products and encourage higher spending by customers already committed to buying.
    - However, one manager comments that the process would be expensive with debatable benefit.
        - "Recommendations and stuff use resources as well. I've got to have my experts take a few hours out of their day, half a day a week; that costs money"
        - "Part of our belief, and it could be wrong, is that our customers are really smart people in terms of their passion, which is music or movies. They know what they want or they want to use this environment to find stuff."

Duration

Customer behavior is relatively stable in a retail environment. Accordingly, fewer duration controls are needed.

- Limited staff involvement necessary while customer is in the store: Customers are left to browse the product range themselves.
    - They only require staff interaction at the point of sale and for product enquiries.
    - Very little variation in point of sale processes.

The secondhand, deep catalogue strategy introduces some variation in customer behavior. Processes have evolved over time to offset these variations.

- Special orders: If a product is not in stock, customers may place an order for it. Staff then search supplier catalogues for the item, order it, and then call the customer for pick up.
    - No fee is charged for the service. However, buyers order additional product in hopes of selling to other customers.
    - If the staff member cannot quickly locate the product, the special order is sent to a dedicated buyer. This means the customer is not left waiting at the counter while the search is conducted.
    - Customer contact details are collected so that staff can call back once they have found the time to search for the item. This provides more flexibility to the staff's work arrangements if the item is hard to find.
    - A set of standard one-stop-shop suppliers are used to minimise search time and shipping costs.

- Secondhand purchases: Trade-ins are largely unpredictable both in terms of the titles arriving and type of customer doing the trade-in. Skilled staff are required to handle each transaction.

Demand analysis

Generally, analysis and decision-making are based on manual analysis and manager intuition. Standardised rules or computer programs are deemphasised.

- Analysis relies on managers. They create their own reports and alerts according to their preferences. Here are illustrative examples.
    - Price movements:
        - One manager comments that pricing and product rules only serve as guides rather than formal requirements: "Those rules are very flexible. They're not rigid at all… We rely on the knowledge and experience of our buyers. The guidelines are only guidelines."
    - Purchasing:
        - "None of it is automated. I mean, it's in the system [but] I wouldn't say it's automated." Computer alerts prompt the buyers for a decision. They then eyeball the product trend and "groom" the product list as needed.
    - Secondhand purchase decisions:
        - "That's a learned skill. It's like a secondhand car dealer or something. Exactly the same. Evaluating the worth of the vehicle as trade-in. Absolute same thing but the product is what it is. It's just years of dealing with it."

- The form of analysis is influenced by organisational culture and nature of the product.
    - The organic style of analysis reflects: the changing nature of the entertainment industry; variation in secondhand stock arrivals; and the organisation's strategy of deep catalogue.
        - For example, with secondhand "the unique thing about secondhand is that there is complete price elasticity on both sides of the process. We have to pay enough for the customer to think they are getting a fair deal and price our items for sale against the same criteria."
    - One manager comments that this form of analysis has been used for a long time in the organization. Other "old style record stores" operate in a similar fashion.
    - Process becomes intuitive after experience:
        - "I mean, I don't think about it. You don't do that when you're doing it. It's like if you're a chef and you've been doing it for thirty years. Do you actually sit back and analyse what you're doing? It's difficult to do."

- Some investigation has been made into formula based systems.
    - One manager comments about the difficulty of this: "I did get my son, using a bit of calculus, to work out what that might mean in terms of stock turns and the like. But there are so many variables that even with calculus it's pretty difficult."

Overall, there is a strong reliance on automated records to provide decision support. However, the reliance on records changes depending on the decision at hand.

- Differences exist in the rigour of analysis and types of decision-support tools used. This depends on the frequency and purpose of the analysis.
    - Individual items: short term item history; and informal search of product popularity.

    - Periodic review: aggregated data by product genre and week; comparisons against benchmarks for performance review.
    - Shop layout: graphs and visualisations to show relative popularity and trends.
    - Customer trends and expected behaviour: primarily manager experience and observation with some trend information.
    - Refer to Pricing, Yield controls, and Product offerings sections for more discussion.

- Managers have a set of KPIs "in order that our intuitive decisions are not misinformed." Examples include:
    - Performance: Sales and gross margin.
    - Transactions: Secondhand vs new item; and loyal versus casual customer.
    - Product: Individual history

- One manager comments on the use of intuition and information "with all of the huge range of variables that are in this [analysing product performance], it's pretty hard to be exact. So there's a huge amount of intuition, but it's intuition that's backed up with a lot of information."

Rate of sale is the main performance indicator at the item level. This effectively means a trial and error approach is used when analysing demand.

- High-value items: Analysis is done at the item level. One manager comments this is particularly important for secondhand items which are difficult to restock. A relatively flexible analytical approach is used.
    - Managers use their intuition when choosing the size of price changes. This is done while looking at the item's sales history.

- Low-value items: Analysed in batches as the additional benefit of item-level analysis does not warrant the extra expense. A relatively rigid analytical structure is used.
    - Prices of a batch are dropped when sales fall below 5 percent of the total number on-hand.
    - No evidence of mathematical analysis found in choosing the 5 percent threshold.
    - One manager comments on the trade-off between higher total sales and faster recovery: "If our threshold was 2 percent, then we would get more money for what we sell because we hold them out for longer. But it would take a lot longer to get that money – that might impact on the sales of the next code up."

- More emphasis placed on retrospective performance than forward looking expectations when deciding how much to stock and what price to set.
    - Sales forecasts are not vital when there are small order sizes. Instead, they can trial many different products and use the rate of sale to assess product popularity.
    - This substitutes for costly analysis into the size of target markets.
    - Analysis focuses on short term historical trends: "All new items that are sold fall into a draft purchase order and our buyers make judgements on re-ordering daily."
    - When first stocking a new product, buyers use the sales history of related items as the base: "I will research the previous record's sales – how well that did at the time and how much life was in it. That will all inform me on how to deal with the new one."

- Spreadsheets and inventory software provide summaries and prompts for manual analysis.
    - Few graphs are used when making item level decisions. Data is in the form of tabulations and any buyer notes made.
    - Sales histories are available for all products.

Comparisons are used to assess the performance and popularity of different genres and media formats. A full review is done every one or two years.

- Sales histories by genre and media formats indicate customer buying trends.
    - Example of genre comparison: "We used to sell more alternative than pop rock. Now it's down to (in CDs) 10 percent compared to pop rock. So there's been a collapse. But now we sell a lot of alternative vinyl. In fact, now we sell more alternative vinyl than we do CDs."
    - Example of media format comparison: "Sales of recorded new music and of movies are diminishing, so we need to look at other formats and product ranges."

- More visualisations are used here to help get a grasp of performance trends.
    - Managers have charts tracking sales trends over a one year period: "We have many departments and they all get summarised and graphed."
    - One manager comments that these reports are kept to avoid "flying blind".

- This guides working capital allocations and informs store layout.
    - These are not used to inform ongoing purchase decisions: "We look at graphs of major genres and formats but that information is seldom used by buyers – more to do with shop layout."

First-hand manager involvement is used to understand the varied customer base and to detect industry fashions.

- Managers find it difficult to systematically examine club member purchase data as members vary greatly in their interests.
    - Comprehensive records of individual customer purchases are available but not used.
        - One manager comments: "We can look at exact purchases but seldom use it as the customer base is incredibly diverse and fragmented."
        - One manager comments: "I think we need to [make use of club member histories]. It takes a little bit of resource, so careful evaluation needs to be made of what we can do by better data mining the information."
    - Some findings appear to be driven by data, although this may be through observation: "We are continuing to attract club members even as we are losing them through attrition, but they are buying different products."

- No customer demographic data is available on non-club member purchases.
    - Managers use firsthand observation to track customer types. For example, that there are "far, far fewer young people coming in".
    - Comparisons made of the proportion of sales made to club versus non-club members.

- Transient nature of entertainment industry makes it difficult to predict product popularity.
    - Staff rely on experience to predict performance: "it's almost entirely, really, experience. What I mean by that is knowing an artist… knowing through experience and anticipating."
        - Estimates are generally broad: "There will be initial interest on all stock, say, for two weeks' to a month's worth of sales of an initial release."
        - One manager comments: "I process the stock as well because it's important to be doing that to be aware of trends and price value trends.
    - An organisational culture of a love of music and media also explains the preference from firsthand experience over structured analysis.

- Some tools are available to assess product popularity.
    - Historical records on related products: For an established artist, buyers use the sales history of the artist's previous releases. For a new artist, buyers look across the same genre.
    - Customer special orders indicate areas for more analysis: "That can always be an indicator that can point you in the direction of something that you weren't aware of."
    - Industry activity flags items for review.

Purely computational analysis is avoided as staff believe it slows reaction time and can cause unrealistic outputs.

- Human interpretation is viewed as better suited to the number of factors under consideration.
    - Centralised, numerical decision-making can be inappropriate. One manager comments about a new retailer setting up in New Zealand: "In their magazine section, they had 4 different books on bass fishing. Now, there are no bass in New Zealand."
    - Forecasting inaccuracy is inevitable, suggesting there is less benefit to structuring forecast decisions: "You can only have too much stock if you over-estimate the potential of some things. And that happens. You can never be 100 percent correct. It's just not possible."

- Interviewees believe that computer analysis is only required when human computational ability is exceeded.
    - One manager comments: "It all comes down to humans and their head and gut feel. But you need support of information in larger organisations to track it."
    - For example, Competitor B relies heavily on KPIs: "They're a very tightly run business and once they get to the point where their return per square meter from records or CDs is less than they could be getting from something else, they're likely to drop them."
    - Some potential areas for analysis are simplified or ignored due to cost.

- Resource requirements constrain data analysis.
    - One manager comments: "We don't measure the impact of pricing. We could no doubt sell more if we offered more, but don't have the available funds to do so and our processes are running very lean."
    - Ongoing analysis is chosen to be time efficient but still involves a heavy time commitment.

        - Weekly secondhand batch pricing: "If I didn't have any interruptions, would be about half an hour to forty five minutes on a Monday. I normally get it done by lunchtime. It's about say fifteen minutes work to change the prices in the system."
        - Daily individual item analysis: "That takes a lot of time to go through all those different suppliers and determine how quickly an item is moving. Whether we sold one in a day, or three in a day, or ten in a day, or none."

- Costs are a primary concern as they can exceed the benefit gained from more analysis.
    - One manager comments: "How much time is it going to take me to analyse this data? Once I've analysed it, it's going to tell me a little bit of info about customers and trends and what they're doing."
    - The next concern is "am I going to make informed decisions from that data review or investigation? And not only informed decisions but am I going to be able to get value by taking some specific actions from that?"

- An example is providing customer recommendations.
    - This has been considered by managers:
        - "One of the things you can most certainly do is: these customers are buying predominantly in these genres. Therefore, maybe we should be making recommendations."
    - However, the resource cost would be high in terms of human resource and technology cost.
        - "Recommendations and stuff use resources as well. I've got to have my experts take a few hours out of their day, half a day a week – that costs money – to perhaps be putting together their recommendations list."
    - Additionally, the revenue benefit is uncertain:
        - "And you could provide that information and they're a digital consumer and they go straight off to iTunes and buy it… They've gone and bought it somewhere where you've got no clip of the ticket. No revenue stream."

- However, once infrastructure is in place, the cost of analysis drops. This can enable previously expensive forms of analysis.
    - For example, the inventory system has enabled thorough item level analysis: "We've got the technology to do it – a lot of record stores back a while ago didn't even have a computerized inventory system. To that degree we're quite sophisticated."

Some potential areas for analysis are simplified or ignored due to a mismatch with the business model.

- Analysis differs between secondhand, deep discount business model and other retailer business models.
    - Businesses relying on high volume and low margins place more emphasis on understanding competitors, negotiating with suppliers for a discount, and developing marketing campaigns.

- Instead the organisation focuses on product depth: “that part of the inventory control we’re very clever with in many, many respects given the complexity… we’re carrying far more skewers than a supermarket does”.

- Different business models can lead to clear differences in the types of factors analysed.
  - The interview highlighted areas not important at the organisation that were important in other retail settings.
    - One manager comments: “It was quite interesting looking at some of your questions and thinking we don’t do that very well, or we don’t consider that issue. We’re really unsophisticated.”
    - He goes on to comment: “We’re unsophisticated but we’re thorough. We’re thorough for our model.”
  - For example, day-of-the-week and time of purchase data are recorded but are not examined at the organisation.
    - One manager comments that the data was available for mining. However, it would not be valuable as the store already needed to be open, rent needed to be paid, and they were not shifting stock around.

Data types

Transaction records are kept at the individual transaction level. Managers often use this data at the item-level or batch-level.

- Inventory management system stores all transactions on an individual item basis to inform ongoing analysis.
    - Product data: format, artist/author, title, pressing, etc.
    - Transaction data: price, letter code, discount, time of sale, tax, etc.
    - Customer characteristics: member/casual customer, website/shop sale.
    - Special orders: contact details; title record details.

- Full item-level sales histories are available and used on a daily basis.
    - Detailed transaction records are needed to update inventory lists, pricing, and purchasing.
        - One manager comments: "For any individual permutation of that album we can track our sales history."
    - Inventory lists use item-level data: this needs to be updated in real-time.
    - Pricing uses varying levels of aggregated data: the level of aggregation depends on the product's characteristics.
        - Fast selling new items: data at individual item-level.
        - Slow selling new items: data at batch-level; all items older than a specified period of time.
        - Low value secondhand items: data at batch-level; reviewed by letter code.
    - Purchasing uses specific item-level data: All items sold fall into a purchase order. Buyers then assess how much to reorder based on short term history.

- Managers keep logs on tactical actions and batch-level price adjustments.
    - One manager comments that they only recently started keeping a history of letter code pricing shifts: "I've only been doing this one now for probably a year. There was a much simpler version, where I wasn't keeping the history, prior to this. I realized that history was very valuable and I didn't want to be losing it."

- Preference found towards raw data rather than high level summaries.
    - Some use of summary measures (KPIs) as performance indicators.
        - E.g., average margin, member/casual sales mix.
    - However, measures like return per square meter are not used. These measures are used in other organisations.
    - Financial reporting measures (P&L and Balance Sheet) also produced on a monthly basis.

Some detail on secondhand items is not recorded due to the nature of the trade-in approach and processing required.

- Secondhand goods are received unprocessed. Records of the purchase are therefore less thorough than purchases of new goods.
    - Trade-ins are tracked by units rather than by title. Trade-ins are classified by format (LP, CD, and DVD).

    - Managers work with summarised records of trade-ins: "I could tell you a weekly average for example."
    - Trade-in trends are hard to track due to the variation in timing of trade-ins: "At the peak it might have been 3,000 units a day. But I would have to go and have a look and it would vary."

- Average costs, rather than specific unit costs, are used to simplify record keeping.
    - For example, upon receipt: "You trade 20 CDs and we pay a hundred bucks for them - $5 each. Then those 20 units come into a pool of secondhand CDs at a hundred bucks. The average cost will change."
    - Products are then processed for re-sale: entering title records, re-conditioning, re-casing, etc.
    - When ready: "the cost price is the average price when they came out of that pool on the day they came out of that pool".

Detailed transaction level demand data is available for club members but only aggregated information is used in analysis. No such information is available about non-club members.

- Member/casual buyer data is only used to determine loyalty discounts and to track the proportion of member sales.
    - Running totals of purchases by each customer are tracked. They receive a bonus after reaching a trigger point.
    - Proportion of member sales is a KPI: "We believe that if half the purchases are made by loyal customers, the proportion is about right."
    - Managers understand these member records are thorough but consider it too costly to use it meaningfully.

- First hand observation while operating the membership program offers some insight into the nature of customers.
    - Turnover of 'loyal' customers: "We are continuing to attract club members even as we are losing them through attrition"
    - Potential to confirm observed trends in customer behavior. E.g. one manager observes that there are "far, far fewer younger people coming in".

- No customer data is recorded for casual customers.
    - One manager comments: "If we sell it to Joe Bloggs, cash customer, then there's obviously no way of tracking who you're selling it to."
    - In contrast: "If it's a club member then obviously you have got some very good information. Because also attached to the product is some categorized information."
    - Contact details are recorded from website purchases.

Internal activity, rather than external events, is the main source of product popularity data.

- Understanding of product popularity mainly relies on internal transactions.

    - To understand genres: “We used to sell more alternative than pop rock. Now it’s down to, in CDs, down to about 10 percent compared to pop rock. So there’s been a collapse.”
    - To understand formats: “The new vinyl sales are going up but they’re only miniscule. Secondhand vinyl sales are really where the money is for us.”
    - To assess business model of being a secondhand retailer: “Almost half of our sales are of secondhand items.”

- Internal activity complimented by staff awareness of industry events.
    - One manager comments: “We rely on the knowledge and experience of our buyers. The guidelines are only guidelines.”
        - For example: “What bands are touring? Who’s on the radio?”
        - This influences purchasing decisions: “If somebody was touring and we get one of their items in.”

- Limited data on tactical competitor activity
    - Some review of industry activity: “Yes we keep an eye on what the industry is doing. You know, if prices are coming down overall across different parts of the catalogue.”
    - The organisation does not closely watch competitor prices.
        - Expects that other organisations may watch competitor pricing closely, especially nearby competitors.
        - One manager comments: “In the sense that if two of them are fighting over being the lowest price for a new release product we don’t even glance that way. It’s not relevant to us.”

- Data on environmental trends is limited to broad directional effects and anecdotal evidence.
    - For example, holiday periods and economic climate.
        - Data is available on this from transaction records.
    - Some use of third party reports and meetings with suppliers but not systematically searched for and captured.
        - Meeting example: marketing plans by record companies and distributors.
        - Reports example: “One of the pieces of information I got from them was that in somewhere about the 90s, big box retail had around 20 percent of the music market in America. That was Wal-Mart, Best Buy, that sort of thing.”

    - No evidence found of formally recording trends in environmental behavior.
        - One manager comments: “It’s when you get a larger kind of store or supermarket or, I don’t know, [Competitor A] or [Competitor C] buying books. When they’re going to be buying thousands of units of a title across their chain, then those types of predictors [become important]”

Data collection

Day-to-day transaction data is collected automatically. This also updates member purchases data in real time.

- The organisation uses a computer-based inventory management system.
    - One manager comments that they use a generic retailing system: "It's point-of-sale and stock management. It's pretty straightforward. It's a product that came out of the book industry, which is easily translated to music"
    - Some generic retailing systems are unsuitable for the music industry: "There were some that couldn't have two product identifiers. So you couldn't have an artist *and* a title – you had to have them all in one which is a little bit pointless."
    - Not all organisations use automated inventory management systems: "We've got the technology to do it – a lot of record stores back a while ago didn't even have a computerised inventory system."

- The inventory system tracks all inventory flows.
    - On hand stock: "Everything that we receive into this business, whether it is secondhand or whether it is new, comes in through the inventory system."
        - Title record information: identifier details; release information; cost price; and sell price.
        - Buyers can set up alerts for each item to guide re-stocking decisions.
    - Special orders: "it captures people's name and address and enables us to contact them".
    - Transactions: barcodes for automated input.
    - Secondhand trade-in: recorded in a different book but is then entered into the inventory system during processing.
    - System records can be extracted into spreadsheet reports for analysis

- Point of sale system also updates member data. This is essential for the customer loyalty scheme.
    - Club members show their membership card at the time of purchase. The system includes this identifier information alongside the transaction.

Manual processing is needed to update the inventory management system. This can be very time consuming.

- In certain retail environments, inventory systems can be updated quickly.
    - Price changes only need an updated sell price field. Corresponding changes are needed to the retail item on-shelf.
    - Receipt of new goods can be scanned into the computer.

- The organisation's secondhand business model introduces a lot of manual processing.
    - One manager comments: "at the time we buy them, we don't have the individual title records. They're not in the individual title records. They're not received as individual title records at the time".

Industry trends, competitor actions, and environmental shifts are not formally recorded. First hand observation is the main way of collecting this information.

- External changes are not recorded for future reference. Data records are primarily internal.
    - Refer to Types of Data section for more discussion.

- However, external sources regularly influence business decisions. Ad hoc processes are used to capture this information.
    - Buyers often search social media (e.g. YouTube, MySpace) to understand current trends.
    - Distributors strongly affect prices through their cost price and discounts offered.
    - Record companies (e.g. Universal Music, Sony Music) regularly meet with managers to discuss trends.
    - Third party reports (e.g. RIAA, NARM) are sometimes read to understand current trends.
    - Counter staff provide information on trends and requests: 'People that are on the floor passing on any enquiries from customers when they're asking about a new record by whomever it might be."

- A business-wide passion for music and media means a lot of industry information is captured by "osmosis".
    - This culture was apparent from the interviews and the detail provided.
        - For example: "Like for instance, we've got a few copies downstairs of a little vinyl package of 45s that are all picture discs of David Bowie. Now that was released as a collector's item in about the 1980s"
        - Experience and day-to-day immersion are also critical to this depth of knowledge.
    - One manager comments: "I procure large collections of music for overseas predominantly – secondhand – and I process the stock as well because it's important to be doing that to be aware of trends and price value trends."