Muscle Heat: a Window into a Thermodynamic Machine

Andrew James Taberner[1,2] , Callum Michael Johnston[1*], June-Chiew Han[1], Poul Michael Fϕnss Nielsen[1,2] and Denis Scott Loiselle[1,3]

Auckland Bioengineering Institute[1] and Departments of Engineering Science[2] and Physiology[3], The University of Auckland, Auckland, New Zealand

*Callum Johnston is currently affiliated with the Heart Science Centre, Imperial College London, London, United Kingdom of Great Britain and North Ireland

Running Title: Measuring and Interpreting Myothermic Measurements

Communicating Author: Denis S Loiselle

Acknowledgements: This work was supported by the Marsden Fund, from Government funding, administered by the Royal Society of New Zealand and by a Project Grant from the New Zealand Heart Foundation. Callum M. Johnston was supported by a University of Auckland Doctoral Scholarship. June-Chiew Han is supported by a Heart Foundation Research Fellowship.

Abstract

The contraction of muscle is characterised by the development of force and movement (mechanics) together with the generation of heat (metabolism). Heat represents that component of the enthalpy of ATP hydrolysis that is not captured by the microscopic machinery of the cell for the performance of work. It arises from two conceptually and temporally distinct sources: initial metabolism and recovery metabolism. Initial metabolism comprises the hydrolysis of ATP and its rapid regeneration by hydrolysis of PCr (phosphocreatine) in the processes underlying excitation-contraction coupling and subsequent cross-bridge cycling and sliding of the contractile filaments. Recovery metabolism describes those process, both aerobic (mitochondrial) and anaerobic (cytoplasmic) that produce ATP, thereby allowing the regeneration of PCr from its hydrolysis products. A parallel basis of partitioning muscle heat production is often invoked by muscle physiologists. In this formulation, total enthalpy expenditure is separated into external mechanical work (W) and heat (Q). Heat is again partitioned into three conceptually distinct components: basal, activation and force-dependent. In the following mini-Review, we trace the development of these ideas in parallel with the development of measurement techniques for separating the various thermal components.

IV. CARDIAC MUSCLE MYOMETRY

(a) Unperfused Whole-Heart: Thermopiles

(b) Perfused Whole-Hearts

(c) Perfused Interventricular Septa

(d) Flow-Through Microcalorimetry

- (i) The Amsterdam Calorimeter
- (ii) The Auckland Calorimeter
- (iii) A Paradigm Shift

I. INTRODUCTION

Muscle is a thermodynamic machine. It operates isothermally, isobarically and isovolumetrically. At the microscopic level, it directly converts the Free Energy component of the enthalpy of ATP hydrolysis into cyclic attachment and detachment of actomyosin crossbridges, together with transportation of ions up their electro-chemical potential gradients. At the macroscopic level, two consequences result: the generation of movement and the evolution of heat. Of these two entities, heat is by far the more difficult to quantify and to interpret. In this brief review, we trace the development of techniques to measure muscle heat production from the mid-19th Century to the present, providing parallel commentary on the progressive understanding of muscle function. We give particular consideration to the development of techniques of separating the metabolic cost of crossbridge cycling from the purely 'overhead' cost of its activation.

II. BASIC CONCEPTS

The early decades of the 19th Century yielded the hard-earned distinction between temperature and heat (in part due to the efforts of Jean Charles Athanase Peltier in France, and Thomas Johann Seebeck in Estonia), as well as eventual acceptance of the equivalence of heat and work (in part due to the efforts of the Scot, James Prescott Joule) in a form now stated as the First Law of Thermodynamics, where a change of energy (ΔE) can take one of two forms: the production or absorption of work (W), or the generation or uptake of heat (Q).

$$\Delta E = W + Q \qquad \text{(Eq 1)}$$

The classical method of measuring heat production is via the use of thermocouples. A thermocouple (Figure 1) consists of a pair of dissimilar conductors bonded together at both ends. When the two ends are held at different temperatures, and the circuit is interrupted, a voltage arises across the break. The magnitude of the voltage is directly proportional to the difference in temperature between the two ends of the thermocouple. The proportionality constant (which varies with the metal) is known as the Seebeck coefficient.

$$V = \alpha(T_2 - T_1) \qquad \text{(Eq 2)}$$

By analogy with the early word for what is now called a battery, a collection of thermocouples wired in series is known as a thermopile.

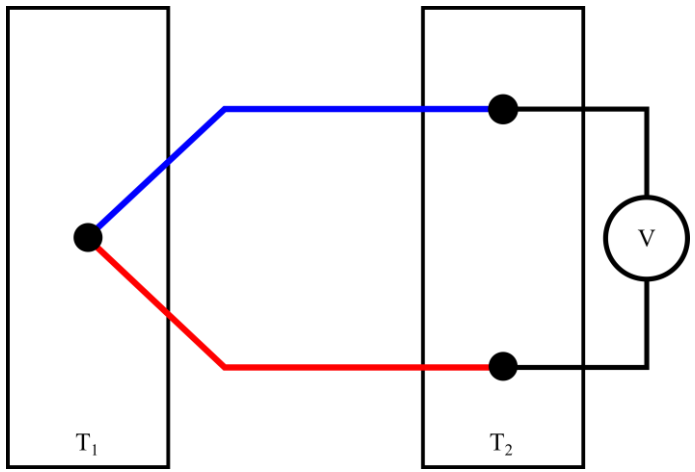

Figure 1. Schematic representation of a thermocouple. The red and blue wires indicate two different conductors bonded together at one end. When temperatures T_1 and T_2 differ, a voltage difference (V) arises in the circuit. Its magnitude is proportional to the difference between T_1 and T_2.

The first reported use of a thermopile to measure the output of heat from an isolated skeletal muscle (see Table 1) is attributed to the German polymath Hermann von Helmholtz, in 1848 (**134**). According to the detailed description provided on Page 151 of Kirkes' Handbook of Physiology (**91**), his thermopile, consisting of 16 antimony-bismuth couples, detected an increase of temperature of 1/4000 °C in response to a two- to three-minute tetanus of frog muscle.

It is germane to note that, whereas Figure 1 shows a voltmeter as a proxy device to determine temperature difference, in practice, von Helmholtz and successors used a galvanometer to detect current. That being the case, a design constraint in the manufacture of thermopiles was to keep the series resistance as low as practicable. One obvious way of doing so was to minimise the number of thermocouples in series. Hence a trade-off between sensitivity and signal-to-noise ratio inheres in the design of thermopiles

III. MYOMETRY of ISOLATED MUSCLES

(a) Flat-bed Thermopiles

The modern era of using thermopiles to measure the heat production of isolated skeletal muscles began in earnest with the description by AV Hill of a thermopile, attributed to Blix (**15**), consisting of five copper-constantan thermocouples arranged in series (**76**). The device is immediately recognisable to anyone who has used a 'flat-bed' thermopile. Hill claimed that the instrument was some five times more sensitive than its predecessor, so was capable of detecting a change of temperature of 1/20,000 °C (**72**). Such sensitivity was enhanced by the low resistance presented by only five thermocouples, thereby

minimising Johnson noise (**85**), the unavoidable, temperature-dependent, random fluctuations of voltage in any electrical conductor (**36, 74**), and the fact that the muscles of choice were amphibian. This choice of muscle preparation allowed experiments to be performed at 0 °C, the unique temperature at which the reference thermocouples can be maintained for extended periods without the need for external thermostatic control. An additional, physiological, advantage obtains at this temperature: 'initial heat', i.e., the (alactic, anaerobic) heat output from a muscle during, and immediately following, a twitch or tetanic contraction, is well separated temporally from the subsequent (lactic and aerobic) 'recovery heat', reflecting the relatively high temperature-dependence of the kinetic processes underlying the latter thermal sources.

Over the subsequent half-century, AV Hill and AC Downing continued to make improvements to their galvanometers (see Appendix I of Hill (**73**)) and thermopiles, including a 'protected region' to account for a cooler segment of muscle moving onto the thermopile during shortening contractions (Fig 2) and steadily-improving frequency response, largely reflecting progressive reduction of thermopile thickness. Indeed, by the time of publication of Hill's seminal 'thermodynamics' manuscript (**71**), the time to reach 50% of maximum response following a calibration pulse of heat (some 25 ms, as inferred from Figure 3 *ibid*) had been reduced 50-fold below that of an instrument used by Hill and Hartree twenty years earlier (**77**). At the same time, thermal base-line stability had been improved to the point that aerobic recovery heat could be followed confidently through its full 30 min time-course following a 12 s tetanus at 0 °C – a remarkable accomplishment, even in an 'ice-bath' (**79**). The thermopiles, constructed by Downing (**73**), consisted of constantan and manganin wire, rolled to 15 µm thickness, mounted on mica and insulated with Bakelite varnish. Some of these instruments were still in use at University College (London) until recent times, which underscores our contention that it would be difficult to overstate the contribution of these two men to the development of myothermic techniques.

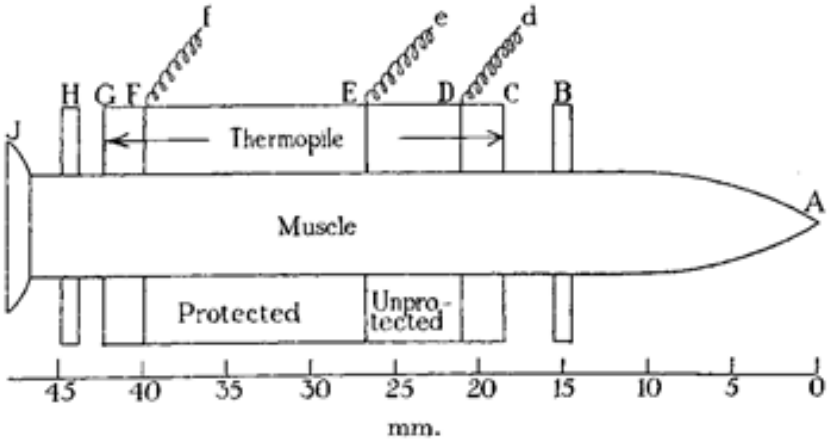

Figure 2. Schematic of the first thermopile to have a 'protected region' (thermocouples in series between *e* and *f)* electrically isolated from an unprotected region of identical thermocouples (between *d* and *e*). Shortening of the muscle from its cooler tendinous end (*A*) avoided thermal contamination of the voltage output from the protected region. [Reproduced from Figure 4 of AV Hill (**73**) with permission of *Proceedings of the Royal Society of London – Series B* and The Royal Society via RightsLink.]

(i) A Paean to AV Hill

But AV Hill's contributions go well beyond thermometric techniques. He made a seminal contribution to the understanding of 'Brownian motion' in the galvanometer (**74**). His 1938 paper on skeletal muscle energetics (**71**) remains a classic in the field. In that paper, he confirmed Fenn's discovery (**37, 38**) that release of a muscle during a steady-state tetanus led to an increment of heat production above its isometric level. The magnitude of the thermal

increment was proportional to *x,* the extent of shortening (ergo: the concept of 'shortening heat'), whereas its rate was inversely proportional to the afterload, *P*. These results, relating force, shortening and heat led to Hill's famous 'Characteristic Equation' - the first quantitative (if phenomenological) thermo-dynamic model (Eq 3).

$$(P + a)V = b(P_o - P) \qquad \text{(Eq 3)}$$

where *V* is velocity, P_o is peak isometric force and *b* is a constant whose units are those of velocity. Whereas Hill himself would ultimately find that *a*, the constant of proportionality in the expression for shortening heat, αx, was not strictly constant, and whereas the model would ultimately be superceded by AF Huxley's 'sliding filament theory' (**83**), the 'Characteristic Equation' still finds wide use today in describing that most fundamental of all the properties of a muscle: its force-velocity relation.

As mentioned above, Downing continually strove to improve the frequency response of both his galvanometers and his thermopiles. These improvements, were paralleled by Hill's laborious 'long-hand' corrections for the rate of heat loss from the muscle-thermopile system (**73**) (preceding by decades the development of mathematical deconvolution techniques), which revealed that heat was evolved "… during the short interval between a shock and the moment when the contraction begins …" This observation led Hill to introduce the notion of 'activation heat' (**70**). The combination of previously revealed 'shortening heat' with recently revealed 'activation heat' (subsequently to be confused with 'maintenance heat' during an isometric tetanus (**75**)), led Hill to propose that muscle heat production consisted of two parts: the heat of activation (*A*) and the heat of shortening (αx):

$$E = A + \alpha x \qquad \text{(Eq 4)}$$

This formulation (**70**) provided an obvious method of estimating the magnitude of activation heat: progressive reduction of the extent of shortening. Whereas Hill was aware of the risk of overestimation of *A* using this technique, he was equally concerned at the risk of causing irreversible damage by stretching the muscle to the point at which active force was eliminated – requiring about 100% extension, as shown by Ramsey & Street for single semitendinous fibres of the frog (**118**). The variability of estimates left Hill reluctant to make a definitive statement. Nevertheless, he estimated activation heat to comprise one-third to one-half of the total heat in a twitch, independent of muscle length – a range of values that was to prove, yet again, his prescience.

(ii) Activation Heat: Skeletal Muscle

A novel suggestion for revealing the magnitude of activation heat, produced during the 'latent period' between electrical stimulation and the mechanical response, was proposed by Gibbs and Ricchiuti (**54**) and subsequently extensively tested by Gibbs *et al*. (**53**). The conceptual model underlying this investigation, attributed to Hill (**69**), is given in Eq 5:

$$Q = A + \alpha x_i + W_i + h(P) \qquad \text{(Eq 5)}$$

where the subscripts signify, respectively, *internal* shortening by, and work against, the series elastic component and *h(P)* represents tension-related heat. Using Sartorius muscles at 0 °C, these authors varied the interval between two consecutive stimuli until mechanical fusion was achieved. At that point, the contributions of the three right-most terms in Eq 5 were assumed to be identical between the two twitches. Hence, the increment of heat associated with the second pulse provided an estimate of *A*: 40% of the total heat in an isometric twitch, rising to 45% at room temperature. At either temperature, activation heat appeared to be independent of muscle length.

In order to compare the magnitude of activation heat in frog and toad Sartorius muscles (at 6 °C – 7 °C), Chapman and Gibbs (**22**) subjected them to isometric contractions, progressively reducing muscle length until developed force was negligible. Whether plotted as functions of force or force-time integral, intersection with the heat axis produced estimates of activation heat in the vicinity of 50% of that recorded at L_o. By this time, the number of distinct contributors to total energy expenditure (*E*) had inflated, as shown in Eq 6:

$$E = A + k_1W + \alpha x + k_2\int Pdt + k_3\int xdt \qquad \text{(Eq 6)}$$

where *W* is now external work, the *k*-terms are constants, and the rightmost term was proposed by Jöbsis and Duffield (**84**). Dissatisfied with that state of confusion, Chapman and Gibbs proffered a radical model for the initial energy of a muscle twitch (**21**):

$$E = A + \Delta H \int k \cdot n \, dt \qquad \text{(Eq 7)}$$

where *A* is activation heat, *n* is the instantaneous number of cross-bridge links between actin and myosin, *ΔH* is the molar enthalpy of ATP hydrolysis and *k* is a constant quantifying the rate of dissociation of cross-bridge links between actin and myosin, which was assumed to vary with species, muscle, temperature and inherent actomyosin ATPase activity. The (long overdue) incorporation of the fundamental thermodynamic assumptions of AF Huxley's 'sliding filament model' (**83**), is apparent in the second term on the right-hand side.

This much-simplified conceptual formulation resonated nicely with the contemporaneous results of Homsher *et al.* (**81**), and Smith (**123**) both of whom exploited the ability to reversibly lengthen the semitendinosus muscles of the frog to the point where active force became negligible (**118**). Both studies

revealed that the right-hand term of Eq 7 was a simple linear function of tension. Its intercept with the ordinate provided estimates of *A* of 30% (n = 35) and 26% (n = 43), respectively. It is seldom that a mathematical model receives such immediate and gratifyingly consistent experimental corroboration.

(iii) Thermopile calibration

To this juncture, thermopiles had generally been calibrated by rapid transference between two water reservoirs held at different temperatures (typically 0 °C and room temperature). But an entirely new approach, which obviated the need to measure either the flux of heat or the difference of temperature, was developed by Kretzschmar & Wilkie (**94, 95**). This method capitalises on another fundamental property of dissimilar conductors – namely, the Peltier effect. The phenomenon is the converse of the Seebeck effect; i.e., if current is passed through a circuit comprising a thermopile, heat is produced at one junction and absorbed at the other. Kretzschmar & Wilkie placed identical metal (copper) blocks of known mass and thermal capacity on 'hot' and 'cold' junctions of a flat-bed thermopile. Passage of current through the circuit caused the temperature of the 'hot' junction (and its added copper mass) to rise and that of the 'cold' junction (and its identical copper mass) to fall until a steady-state of temperature-difference prevailed. At this point, heating was discontinued and the system allowed to cool, while the voltage was monitored. From the accompanying exponential rates of decline of temperature with time, the Seebeck coefficient could be calculated (**95**). The near-perfect linearity of the system (see Fig 1A of (**94**)) meant that only a single copper block needed to be used and, since thermal equilibrium is established much more quickly at the reference than at the active junctions (**78**), it was placed at the latter location.

(b) The integrating thermopile

(i) Enthalpy of phosphocreatine hydrolysis

In order to link, quantitatively, the biochemical and biophysical energetics of muscle contraction, the existing thin, multi-couple thermopiles, with their focus on high sensitivity and rapid frequency response were unsuitable. What was required, instead, was a device with a negligible rate of heat loss and a stable thermal baseline over extended periods, in order to capture all of the heat released over the entire length of the muscle throughout any contractile sequence, including trains of 30 or more twitches. To that end, Wilkie (**138**) developed the 'integrating thermopile', which he described as "… resembl[ing] a calorimeter opened out flat so that the muscle can lie along its surface." The surface, mimicking the dimensions of a frog sartorius muscle, consisted of a 250 μm thick strip of silver, thereby ensuring rapid conduction of heat from the muscle to the thermocouples and rapid equilibration of longitudinal temperature gradients. The device was calibrated by Joule heating of a fine constantan wire running the length of the silver. Muscle heat production, corrected for (slow) heat loss, was inferred from the output of a pair of chromel-constantan junctions connected between the silver strip and the anodised aluminium frame. The unit was mounted in a stainless-steel frame and immersed in an ice-water bath at 0 °C. Electrical noise was reported to be about 0.006 μV peak-to-peak or "… roughly double the Brownian noise to be expected in the galvanometer".

The immediate purpose of Wilkie's experiments was to provide an estimate for the enthalpy of breakdown of phosphoryl creating (PCr). To that end, they were performed under nitrogen (to prevent aerobic oxidation) and in the presence of iodoacetate (to prevent anaerobic glycolysis). Immediately upon

completion of the thermal measurements, the muscle was rapidly frozen and the total breakdown of PCr biochemically determined with respect to paired but unstimulated muscles. The resulting estimate of ΔH_{PCr}: -11 kcal/mole, is still a much-quoted value - seminal work, indeed!

(ii) Smooth muscle myometry

Gibbs (**35**) modified Wilkie's original (**138**) 'integrating thermopile' design by bending two electroplated thermopiles ((**120**) to produce a surface curved at about 30 ° along the midline of the active junctions (see Figure 3). The surface of the silver strip was similarly curved. The objective was to increase contact between the surface of the silver and that of a smooth muscle preparation: rectococcygeus of the rabbit. The output of the thermopile was 11.4 mV/°C and its rate of heat loss was exponential. Experiments were performed at 27 °C. Gibbs and Loiselle (**50**) subsequently used this integrating thermopile, as well as one of slightly higher sensitivity, to examine the effects of temperature (19 °C *versus* 29 °C) on the same type of muscle preparation. Further experiments characterising the energetics of smooth muscles have been performed using rat anococcygeus muscle (**135**) and longitudinal muscle from the rabbit urinary bladder (**108, 136, 137**). The brevity of this list highlights the existence of a largely under-explored field of muscle energetics.

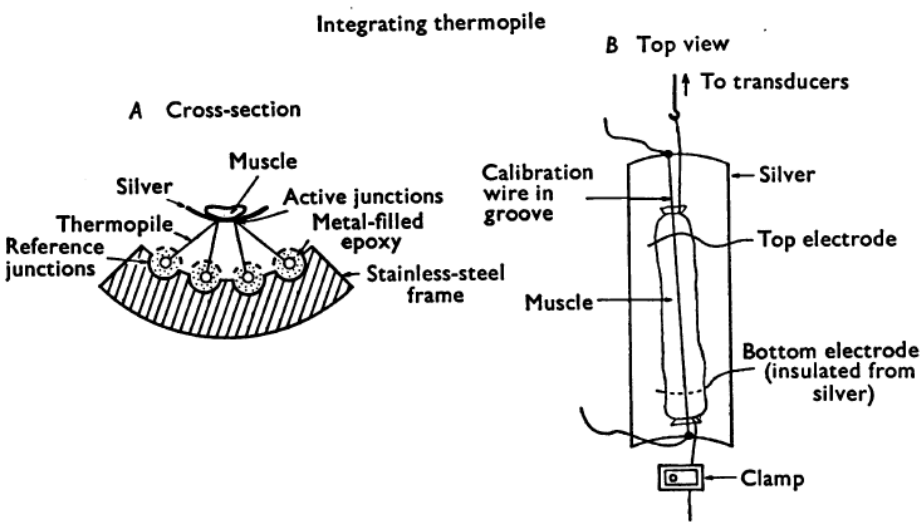

Figure 3. Schematic of 'second generation' integrating thermopile. A: thermopile, silver strip and muscle in cross-section. B: top view of the muscle lying on the silver strip, above the embedded chromel heat-calibration wire. Reproduced from Davey *et al*. (**35**) with permission of the Copyright Clearance Center.

(c) Wire-wound electroplated thermopiles

Until the mid-1960s, myothermic studies focussed almost exclusively on skeletal muscles from the frog, "the Old Martyr of Science" (**80**). But, at that time, interest expanded to include cardiac muscle, where preparations of suitable size were presented by papillary muscles from small mammals. Despite the suitability of size, its cylindrical shape ensured poor contact with the 'flat-bed' nature of existing thermopiles. To overcome that issue, Ricchiuti and

Mommaerts (**120**) moulded wire-wound thermopiles to contain a centrally-located hemi-cylindrical trough, as shown in Figure 4. The thermopiles were constructed by winding a continuous length of constantan wire around a pair of threaded pre-anodized mandrils. One-half of the resulting longitudinal helix was masked and the other half etched electrolytically and electro-plated with silver. Compared to the authors' conventional flat-bed thermopiles, consisting of 32 active silver-constantan junctions, whose resistance was 27.5 ohm and output 0.815 mV/°C, the new wire-wound 'trough' design comprised 50 active junctions with resistance approximately 1000 ohm and output 3.25 mV/°C. This transition to many more thermocouples, with attendant increase of series resistance, was made possible by the commercial availability of the *Astrodata 120 Nanovolt* amplifier whose maximum gain was 10^6 with a flat frequency response from DC to 200 Hz. With that development, coupled with the greater ease of 'wire-wound' construction, galvanometry largely faded from the field.

(i) Activation Heat (Cardiac Muscle)

Upon changing focus to the energetics of cardiac muscle, Gibbs and colleagues did not have the luxury of stretching papillary muscle beyond L_o (the length at which active force development is optimal). Hence, they were obliged to use a protocol in which force was progressively reduced by shortening muscles to lengths less than L_o. Whereas this risked contamination of microscopic cross-bridge activity, undetectable macroscopically, at short lengths (**70**), the estimate of activation heat as a proportion of total heat in a twitch was about 23% (**52, 119**), thereby giving further credence to the conceptual model represented by Equation 7.

Gibbs and Vaughan (**55**) also adopted the 'pre-shortening' technique. Because of the absolute reliance of cardiac contractility on the presence of extracellular calcium ion (**121**), extracellular Ca^{2+} concentration became the variable of interest. Nominally Ca^{2+}-free superfusate roughly halved the magnitude of

activation heat whereas raising temperature from 18 °C to 32 °C reduced it by an equivalent fraction. In their comprehensive discussion, the authors review the evidence that activation heat probably reflects, in large part, the energetic cost of returning 'trigger Ca^{2+}' to the sarcoplasmic reticulum during relaxation. Hence attention turned to the effect of known inotropic agents on activation heat, Gibbs demonstrating the potentiating effect of catecholamines (**45, 49**) and elevated concentration of extracellular Ca^{2+} (**43**).

Later investigators adopted various methods to avoided using the pre-shortening protocol. Thus Alpert et al. (**1**) eliminated tension (and, by extension, tension-dependent heat) in isometrically-contracting rabbit papillary muscles at 21 °C, by using a mixture of BDM (2,3-butanedione monoxime) and hyperosmotic mannitol. These authors found tension-independent heat to be reduced at reduced muscle lengths and increased at increasing pacing frequencies when using hypertonic solutions ranging from 2 to 2.5 normal osmolarity. Given that hyperosmotic superfusion had long been recognised to increase intracellular Ca^{2+} concentration and heat production (see Loiselle et al. (**99**) and references therein), this result remains contentious.

In contrast to the 'BDM and mannitol' approach, Gibbs et al. (**51**) developed a purely biophysical technique, 'latency relaxation', in which a papillary muscle at optimal length was rapidly shortened during the latent period between delivery of the electrical stimulus and the onset of measureable shortening or force production. By grading the extent of shortening, a heat-stress relation was generated. The intercept of this relation yielded an estimate of activation heat that was approximately 50% higher than the value arising from the pre-shortening protocol, accounting for 30% of the heat in a maximal isometric contraction at optimal length. This proportion approximated that found earlier in skeletal muscle (see Section III(a), (ii)) but was substantially higher than that reported by Alpert *et al* {Alpert, 1989 #3891}

Kiyooka et al. (**92**) capitalised on Suga's 'Pressure-Volume-Area' (PVA) concept (see Section IV(d), (ii), below) in a study using the blood-circulated, cross-perfused, dog heart. By subtracting the heart-rate-independent metabolic rate during K^+-arrest (as determined in a previous study (**107**)) from the intercept of

the VO_2-PVA relation, Kiyooka et al. generated an estimate of activation heat. Contrary to suggestions by both AV Hill and Gibbs & Vaughan (see above), these authors found this component of cardiac energy expenditure to increase nearly four-fold as pacing frequency was increased from 60 min^{-1} to 180 min^{-1}. Clearly, the jury remains 'out' on most of the important details of activation heat in cardiac muscle: its magnitude, length-dependence and heart-rate-dependence.

(ii) Work and Efficiency (Cardiac Muscle)

Despite uncertainty concerning the contribution of activation heat, interest progressively shifted to quantifying the efficiency of afterloaded isotonic contractions, by analogy with the efficiency of the heart performing pressure-volume work. Efficiency (ε) is given by the ratio of external work (W) to enthalpy (ΔH):

$$\varepsilon = W/\Delta H \qquad \text{(Eq 6)}$$

where, in the case of isolated muscles, W is the product of afterload and extent of shortening, and enthalpy is the sum of heat (Q) and work. Over subsequent years, Gibbs and colleagues, using predominantly wire-wound thermopiles (**23, 42, 44, 46, 47, 97**), examined the influence of various factors anticipated to affect efficiency. In every case examined, the dependence of efficiency on afterload varied roughly parabolically, being optimal in the vicinity of 0.3 peak isometic force (**47**), and peaking at a value of 10% to 15%. Somewhat paradoxically, agents such as ouabain (**48**), catecholamines (**45**), caffeine or elevated $[Ca^{2+}]_o$ (**24**), all of which were found to increase contractility, tended to diminish contractile efficiency because of their pronounced potentiation of the activation heat component. Somewhat later, Barclay and colleagues developed software to drive papillary muscles through isotonic work-loops,

comparing the effects of ‘realistic’ and ‘sinusoidal’ strain patterns on heat production (**14, 103, 104**) and clarifying the distinction between cross-bridge and mitochondrial efficiencies (**11, 12**).

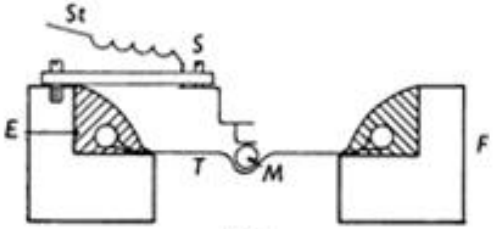

(a)

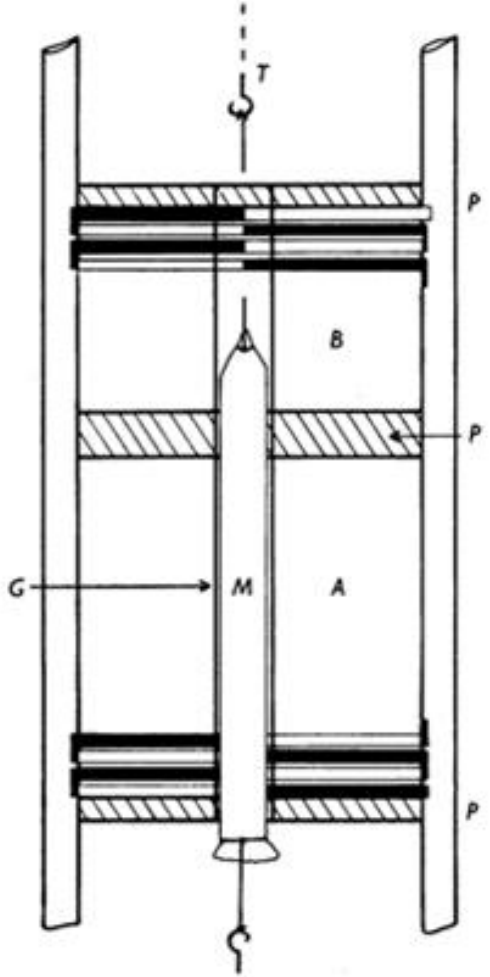

(b)

Figure 4. Schematic (not to scale) of a wire-wound thermopile (*T*) supporting a rabbit right-ventricular papillary muscle (*M*) in cross-sectional view (upper panel: (*a*)) and longitudinal view (lower panel: (*b*)). The cold junctions are embedded in epoxy (*E*) bonded to the frame (*F*). Note the protected regions (*P*). Electrical stimulation of the muscle achieved by lowering the stimulation leads (*St*) to just contact the surface of the muscle, using screw (*S*). [Reproduced from Figure 1 of Gibbs *et al*. (**52**), with the permission of *The Journal of Physiology* and John Wiley and Sons via RightsLink.]

(d) Vacuum-deposition, thin-film, thermopiles

In the continual pursuit of improved performance and simplified methods of construction, the wire-wound thermopiles of Ricchiuti gave way to vacuum-deposition techniques. Mulieri *et al*. (**105**), using reversible copper masks, evaporated bismuth and antimony onto thin, planar mica sheets. Whereas mica rendered the thermopiles brittle, the thinness of the sheet, combined with the Bi-Sb couples, considerably reduced the thermal lag, while allowing an excellent signal-to-noise ratio. Despite the availability of the recently-published "Peltier cooling" approach of Kretzschmar & Wilkie (**94, 95**), the authors continued to calibrate their new thermopiles by rapid transference between two water baths of different temperature. Regardless of this detail, vacuum-deposition has become the thermopile fabrication technique of choice. For the interested reader, attention is drawn to the highly pertinent publication by Barclay {Barclay, 2015 #7801}, published during the period of revision of the current manuscript.

(e) Single-fibre experiments

The vacuum-deposition thermopiles of Mulieri *et al.* (**105**) were developed primarily for use with thin rabbit right-ventricular papillary muscles, although the authors pointed out that they were also suitable for thermal measurements of bundles of skeletal muscle fibres. However, the ultimate refinement, in this direction, measurement of the heat produced by a single anterior tibialis muscle fibre from the frog, was nevertheless made by Curtin *et al*. (**29, 30**) using thermopiles of the Hill-Downing type modified along the lines described by Howarth *et al*. (**82**). Very low heat capacity was achieved by using 20 brazed constantan-chromel thermocouples, flatted to 8 μm thickness, insulated between two 6 μm thick layers of Kapton film (Figure 3). Using a galvanometer arrangement similar to that described by Howarth (**82**), sensitivity was such that the voltage ouput of a single fibre from the frog anterior tibialis muscle at 15 °C was approximately 0.5 μV in response to a single stimulus.

A decade would pass before single fibre experiments were again performed, now using bismuth-antimony couples in thermopiles of the Mulieri-type (**105**) and low-noise amplifiers. Thus Barclay *et al.* (**8**) examined the differential effects of mild fatigue on crossbridge and non-crossbridge force and heat production of single frog fibres as well as small bundles of fibres. Their measurements implied that non-crossbridge heat (estimated by extrapolation to 0% 'filament overlap') contributing 25%-30% of the heat generated at 100% filament overlap. Shortly thereafter, Buschman *et al*. (**18, 19**) characterised the mechanical and thermal behaviour, at room temperature, of single slow-twitch and fast-twitch fibres dissected from the iliofibularis muscles of the African clawed frog *Xenopus laevis*. Yet again, a principal focus was the separation of muscle heat into its force-independent (activation) and force-dependent (actomyosin ATPase) components (**20**). The results were strikingly fibre-type dependent, activation heat accounting for approximately 30% of total heat production in Type 1 fibres but slightly over 50% in fibres of Type 3.

Subsequent substitution of melinex (polyethylene terphthalate) sheets (of thickness 12 µm) by Barclay's group (**4-7, 9, 10, 13, 26**) greatly reduced the brittleness and fragility of mica-based vacuum-deposition thermopiles without loss of thermal sensitivity or reduction of frequency response. As with all flat-bed thermopiles, the frequency response was nevertheless diminished somewhat, as were the rates of diffusive exchange of oxygen and carbon-dioxide, by the layer of solution adhering to the muscle as shown schematically in Figure 5(b).

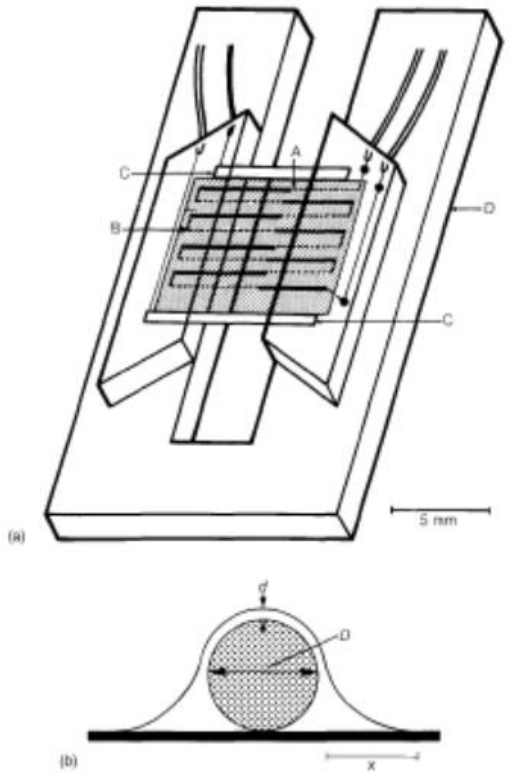

Figure 5. (*a*) Schematic (not to scale) of a vacuum deposition thermopile of the type developed by Mulieri *et al*. (**105**). *A* and *B*: 'hot' and 'reference' junctions, respectively. *C*: platinum electrode; *D*: frame. (b) Schematic of the cross section of a single skeletal muscle fibre of diameter D = 10 μm. The thickness (*y*) of adhering Ringer solution (white) in the region marked *x* is assumed to be described by: $y = (D/2)\, e^{-x/\lambda}$, where λ = 100 μm. [Reproduced from Figure 1 of Curtin *et al*. (**29**) with permission from the *Journal of Muscle Research and Cell Motility* and Springer via RightsLink.]

(f) The Golay cell

A variation on the technique of measuring the heat produced by muscles resting on a planar surface was introduced by Fraser (**40, 41**) and subsequently replicated by Kobayashi & Sugi (**93**). These authors constructed infra-red radiometers based on the Golay cell, a device consisting of a gas-filled cavity and a diaphragm that absorbs radiation in the infrared region of the electromagnetic spectrum. Absorption raises the temperature of the diaphragm and that of the gas, thereby causing it to expand and distend the diaphragm, the extent of which can be measured opto-electronically. The infra-red region of the thermal spectrum generated by contraction of a muscle was captured from a (7 mm^2) region of the surface of the muscle (frog sartorius at temperatures of 15 °C (Fraser) and 23 °C to 26 °C (Kobayashi & Sugi). The frequency response and signal-to-noise ratio of the devices were comparable to, or better than, those of contemporary flat-bed thermopiles. That the infra-red myometer did not find wider usage can probably be attributed to the size of the Golay cell and the resulting large surface area of muscle required.

IV. CARDIAC MUSCLE MYOMETRY

(a) Unperfused Whole-hearts: Thermopiles

At the suggestion of AV Hill, Fischer (using Downing's flat-bed thermopiles) attempted to measure the heat production of working hearts (either intact or split longitudinally and flattened) from the frog, eel and tortoise (**39**). Needless to say, 'muscle movement' was an issue. Temperature changes in the order

of 1 mK were recorded, but "No definite conclusions could be drawn from the[se] results." (P 333). A decade earlier, Snyder had used the terrapin heart, maintained at 10 °C to 12 °C in "a 'thermos' food jar … obtained in the shops…". "Experiments were performed between one and four o'clock in the morning when the [street] car service was reduced to one car every thirty minutes [so that] satisfactory observations could be made." Snyder used two different, 30-thermocouple, thermopile designs: "… one [in which] the instrument is made to clasp the tissue, the other [in which] the tissue is made to clasp the instrument." In keeping with the contemporary practice, the current output from the thermopiles was detected by a galvanometer. Early experiments (**126**) focussed primarily on the timing of heat production with respect to the contraction of the heart beat but the quality of the records remains impressive. By the following year (**127**), Snyder's interest had shifted to separating 'initial heat' from 'total heat' in a single heartbeat, using the improved 'Einthoven galvanometer', thereby allowing him the privilege of coining the phrase "thermocardiogram" (**124, 125**).

(b) Perfused Whole-hearts

In every study referenced above, the muscle preparation was non-perfused. Hence, except for the aforementioned single-fibre studies (**8, 18-20, 30**), the issue of the adequacy of oxygen supply to the muscle core by diffusion from its surface(s) continued to concern experimentalist. For example, this concern motivated Kiriazis and Gibbs (**88-90**) to split papillary muscles longitudinally in order to increase the rate of radial diffusion of oxygen from the superfusate to the muscle core. But, substantially preceding this novel undertaking, investigators began to explore the feasibility of measuring the heat production of the perfused whole-heart preparation. The first success was that of Neill *et al*. (**106**) who determined the rate of removal of heat by the coronary circulation from measurements of coronary flow and the veno-arterial temperature gradient, using thermistor-tipped catheters placed in the ascending aorta and great cardiac vein. *In situ* experiments were conducted in anaesthetised, closed-chest dogs and a wide range of haemodynamic conditions explored. The

production of heat was attributed exclusively to the left ventricle. A decade later, McDonald (**102**) simplified the experimental protocol by developing a Dewar-flask calorimeter to measure the heat output of isolated, isovolumically-contracting, Langendorff-perfused rabbit hearts. In order to be able to separate tension-dependent and tension-independent heat, so that his results could be compared to published papillary muscle studies, McDonald used a simple spherical model of the heart to estimate wall tension from LV balloon pressure, revealing that some 50 % of total heat production arose from force-independent sources, a value rather higher than those reported for isolated papillary muscles. Coulson & Rusy (**28**), extended the 'Dewar flask' technique by supplementing thermocouples with polarographic PO_2 electrodes placed in the arterial and venous lines, thereby allowing simultaneous measurements of heat and oxygen consumption. Comparable systems were subsequently used by Theisohn and colleagues (**133**) to study the mechano-energetics of the isolated rabbit heart, as well as by Coulson (**27**) in an extensive exploration of the effects of varying LV volume, and hence peak LV pressure, on heat production. Coulson arrived at a remarkably similar estimate of the proportion of energy expenditure unrelated to contraction that McDonald had observed earlier.

(c) Perfused inter-ventricular septa

Somewhat later, an innovative contribution to the field of myocardial myometry was provided by Ponce-Hornos and colleagues (**116**). This group initially developed a method to measure myocardial heat production in the isolated, arterially-perfused, interventricular septum of the rabbit (Figure 6). Perfusion of the septum via its own circulation achieved a compromise between the isolated heart and its isolated muscles. It ensured adequacy of oxygenation while allowing ready control of perfusate constituents including PO_2. In addition, the effluent could be collected and analysed for lactate production in order to quantify the extent of anaerobic metabolism. The fundamental shortcoming of the tissue preparation reflected its triangular shape – inability to make

unambiguous estimates of mechanical performance. Nevertheless, the measurements of both resting metabolism and heat per twitch aligned well with thermometric estimates. The technique immediately produced a flurry of publications (**17, 111-113, 117**). It was later extended to accommodate the perfused rat whole heart, as well as either its isolated left ventricle or right atrium (**122**), complete with indwelling left-ventricular balloon to alter mechanical energy demand (**16, 25, 100, 101, 122**) and, subsequently, the mouse heart (**115**), culminating in a demonstration of measuring the heat production of aliquots of isolated cardiac myocytes (**114**). Interestingly, the technique has not been adopted by other groups in the interim.

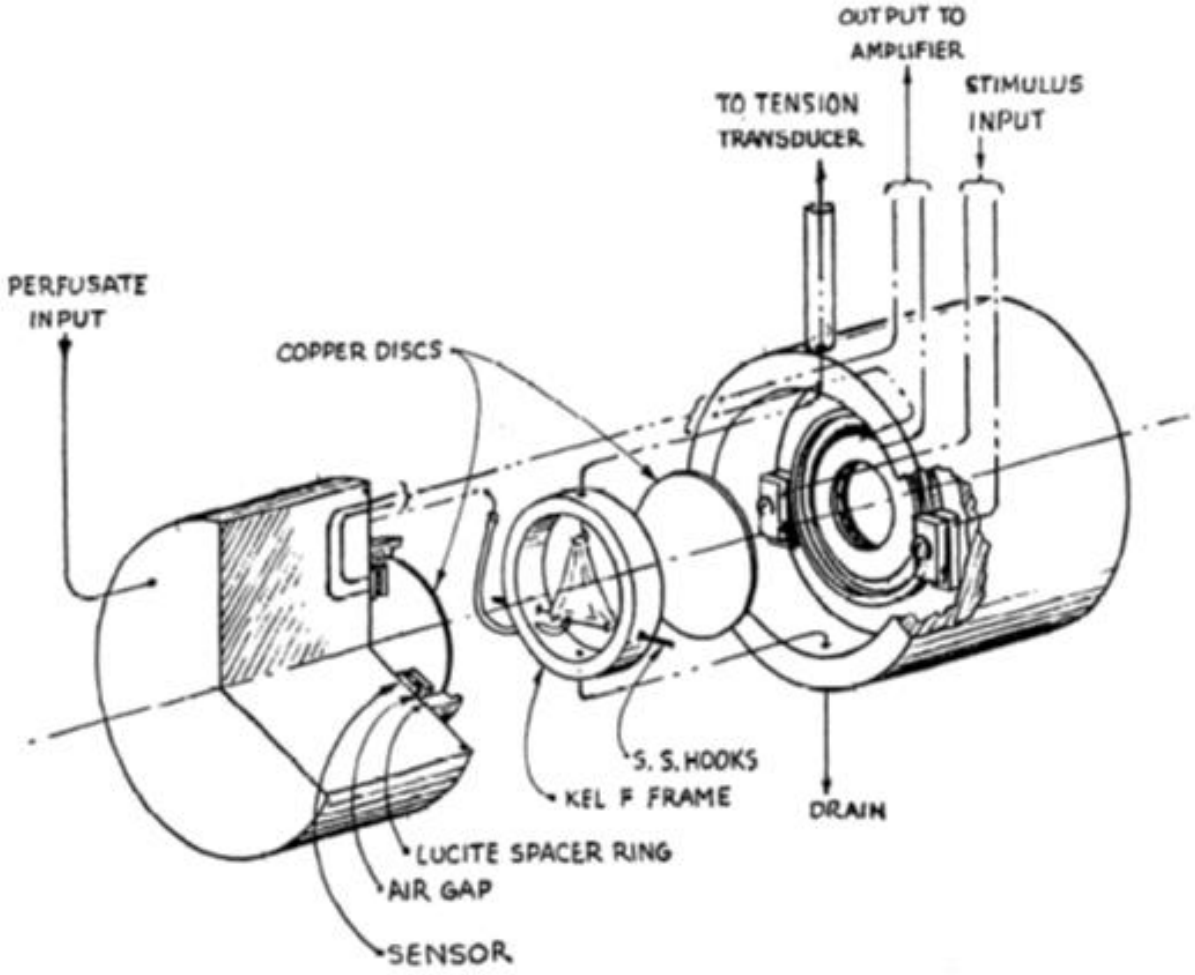

Figure 6. Schematic cutaway diagram depicting, in exploded view, an 'on-line calorimeter'. Note the triangular-shaped, arterially-perfused, rabbit interventricular septum located between a pair of lower stainless steel (S.S.) hooks, which double as stimulus electrodes,

and an upper connection to a force-transducer. After closure, the calorimeter is immersed in a thermally-isolated constant-temperature water bath. Two temperature-sensitive units, each comprising 31 thermosensitive junctions are connected in series and lie between the inner chamber and the copper heat sink. [Reproduced from Figure 1 of Ponce-Hornos *et al*. (**116**) with permission purchased from *The American Physiological Society* via RightsLink.]

(d) Flow-through microcalorimetry

The historical trajectory of myothermic measurement techniques, traced above, can be viewed as a continual striving for balance among three (often competing) requirements: resolution of heat measurements, adequacy of thermal frequency response, and adequacy of oxygenation of the muscle preparation. In general, flat-bed thermopiles, when used to study either isolated whole skeletal muscles or isolated papillary muscles, achieved the first two of these requirements. But, except for the study of single skeletal fibres frogs (**8, 18-20, 29, 30**) or, Barclay's studies of bundles of fibres from the hind-limb muscles of the mouse(**2-7, 13, 26, 96**), simultaneous achievement of all three requirements has been rare.

(i) The Amsterdam microcalorimeter

A fundamental change of approach to thermal measurements, at least for studies of cardiac muscle, was taken by Daut and Elzinga (**31**), who developed a flow-through microcalorimeter designed to allow the measurement of heat production by thin cardiac trabeculae isolated from the right ventricles of guinea-pigs. Because of the linear arrangement of their myocytes, trabeculae are ideal for mechanical measurements (**132**). Because of their small radii, trabeculae superfused with oxygenated saline solutions are unlikely to experience oxygen diffusion insufficiency, even at high rates of stimulation (**61**). The design of the 'Amsterdam calorimeter' was conceptually simple: hexagonal upstream and downstream arrays of thermocouples were embedded in the

walls of an acrylic tube of inside diameter 0.8 mm. When a trabecula was placed inside the tube, mid-way between the two thermocouple arrays, and a flow of superfusate commenced, the downstream array of thermocouples reported a higher voltage than the upstream one (Figure 7). Knowing the Seebeck coefficients of the thermocouples, and the rate of flow of superfusate, the rate of heat production by the trabecula could be calculated. The technique has been variously used to determine the time- and PO_2-dependence of cardiac resting heat production (**32**), and the effects on muscle heat production of metabolic substrate (**33**), inhibition of the sarcolemmal Na^+-K^+ ATPase (**32, 34**), hyperosmolality (**99**), pharmacological agents (**58**) and chemical skinning (**98**).

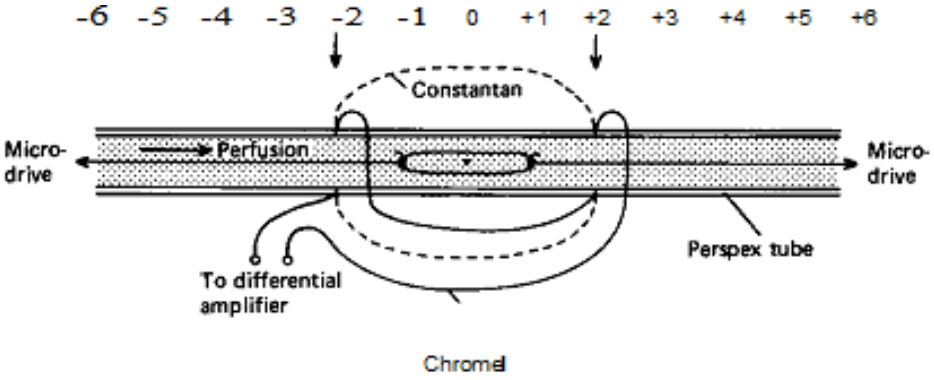

Figure 7. Schematic of the *Perspex* flow-through recording chamber (i.d. 0.8 mm; o.d. 1.0 mm) of the 'Amsterdam' calorimeter, comprising hexagonal upstream and downstream arrays of chromel-constantan thermocouples (for clarity, only a single couple is displayed) embedded,

at 4 mm separation, into the 100 μm thick walls of the tube, thereby having no contact with the 37 °C superfusate. [Reproduced from Figure 1 of Daut & Elzinga (**32**), with permission of *Journal of Physiology*, John Wiley and Sons and the Copyright Clearance Center.]

(ii) The Auckland microcalorimeter

Despite this list of achievements, the 'Amsterdam microcalorimeter' suffered from the inability to make mechanical measurements simultaneously with thermal ones. This limitation has recently been overcome by Taberner and colleagues. The devices designed and constructed by this group are similarly 'flow-through', but open-ended (**130**). The first version (Figure 8) used thin-film infra-red thermopile sensors in 'conduction mode' (**62**) and allowed the heat output of rat right-ventricular trabeculae undergoing fixed-end contractions to be made (**63**). Subsequent modifications to both hardware and software (**129**) achieved both truly isometric contractions as well as isotonic 'work-loop' contractions at various afterloads. Nevertheless, it remains that any flow-through device necessarily sacrifices frequency-response *vis-à-vis* that of any of the flat-bed thermopiles aside from Wilkie's 'integrating thermopile'. Indeed, the flow-through design renders the separation of initial and recovery heat unlikely in the Auckland device.

An early use of the instrument aimed to understand the thermodynamic basis of Suga's 'PVA Efficiency' (**128**), in which the numerator of Eq 6 comprises an arbitrarily-defined segment of the triangular region lying between the end-systolic and end-diastolic pressure-volume relations of the heart. This investigation was motivated by the yawning conceptual and quantitative disparities between the resulting load-independent, constant value (typically 40%) of 'PVA efficiency' *and* the much lower and load-dependent values reported by Gibbs *et al*. (**42**). Clarification was achieved upon demonstration that the 'work' term in Suga's formulation (i.e., the numerator of Eq 6) contained a constant proportion of heat production. This rendered its numeric value both inflated and afterload-invariant, leading to "The demise of isoefficiency" (**65, 66**).

A subsequent undertaking addressed a further issue of fundamental thermodynamics: published claims of greatly increased cardiac efficiency in animals fed diets supplemented with Omega-3 fish-oils (**109, 110**). Despite careful recapitulation of dietary protocols, results from trabecula experiments in the flow-through microcalorimeter showed no effect of fish oil supplementation on load-dependent cardiac efficiency (**56**). Nor did those from isolated working whole-hearts (**57**).

The microcalorimeter provided the ideal tool with which to explore interventricular differences in both isometric and isotonic performance of isolated trabeculae. Whereas there was no difference in mechanical performance, the elevated activation heat of specimens from the left ventricle rendered their contractile performance less efficient (**64**). More recent studies have shown that Streptozoticin-induced Type I diabetes has no effect on the energetic performance of ventricular trabeculae (**68**) despite causing the peak efficiency of the isolated whole-heart to shift to lower values of afterload (**60**). In contrast, the force-length work output of trabeculae from spontaneously hypertensive rats, whether at 'failing' or 'non-failing' age, has been shown to decrease v*is-à-vis* that of age-matched control animals. Since the decrement of work exceeded that of heat production, contractile efficiency declined (**67**). The extent of decline mirrored the increase in mass of the heart (**59**).

(iii) A paradigm shift

But whether in the 'Amsterdam' or 'Auckland' microcalorimeters, the basic *modus operandi* is to infer muscle heat production from the increase of temperature of superfusate flowing at a known rate between upstream and downstream arrays of thermocouples. We now report a further paradigm shift in the measurement of muscle heat production – adoption of thermo-electric modules (Peltier heat pumps) as the thermal sensors *per se.*

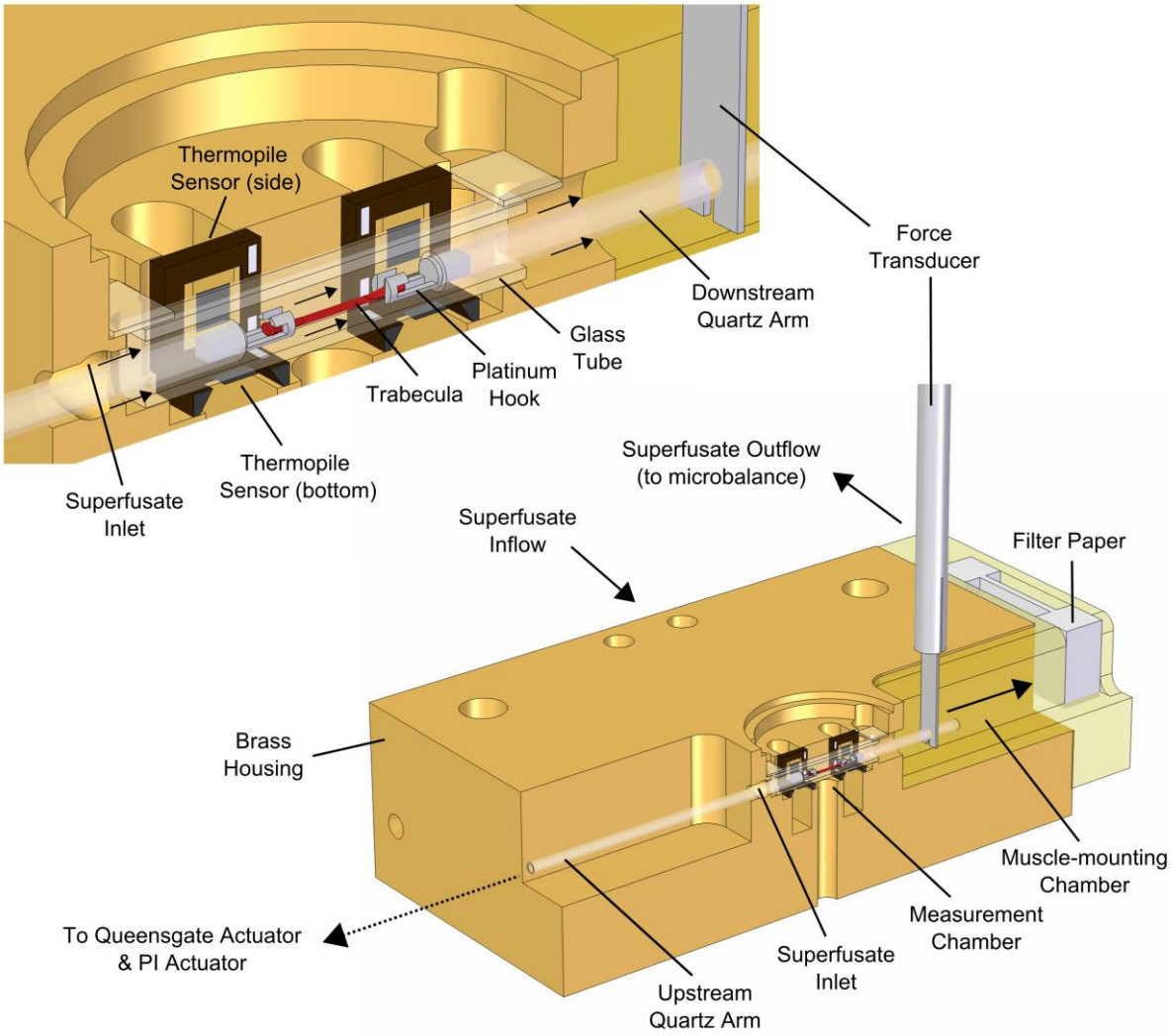
Thermopile
Sensor (side)
Force
Transducer
Downstream
Quartz Arm
Glass
Tube
Platinum
Hook
Trabecula
Thermopile
Sensor (bottom)
Superfusate
Inlet
Superfusate Outflow
(to microbalance)
Superfusate
Inflow
Filter Paper
Brass
Housing
Muscle-mounting
Chamber
Measurement
Chamber
Superfusate
Inlet
Upstream
Quartz Arm
To Queensgate Actuator
& PI Actuator

Figure 8. Schematic cut-away view of the 1st generation 'Auckland microcalorimeter'). The muscle chamber comprises an open-ended borosilicate tube and three externally-mounted infra-red thermopile arrays located upstream and downstream of the centrally-located trabecula. Superfusate enters the measurement chamber, under gravity-feed, via an upstream inlet in the brass block and exits downstream via filter paper to prevent micro-meniscus disturbance to flows. [Reproduced from Figure 1 of Han *et al*. (**62**) under the aegis of the *Rights of Authors of APS Articles*.]

The use of heat-pumps as thermal sensors is certainly not unknown, since they have long been employed in the practice of isothermal titration calorimetry. Their use in muscle myometry reflects a shift of objective from maximising the temperature increase and corresponding voltage signal, to maximising the signal-to-noise ratio. Heat pumps typically comprise few thermopiles with a relatively small gap between the hot and cold junctions. This decreases the overall Seebeck coefficient of the sensor but also decreases the electrical resistance, thereby decreasing Johnson noise (**87**). Common-mode noise that is introduced during the measurement of the thermoelectric voltages can be minimised by measuring independently the upstream and downstream signals, and calculating the difference using software. The 'Peltier microcalorimeter' resulting from this latest paradigm shift (Figure 9) retains the same fundamental 'flow-through' design. Whereas it has lower sensitivity than the previous 'Auckland microcalorimeter', implementation of flow-control and improved temperature-control has achieved a signal-to-noise ratio of 1700, an order of magnitude improvement over the original 'Auckland microcalorimeter' (**87**), providing thermal sensitivity of 10 nW.

A further refinement of the 'Auckland microcalorimeter' is the use of additional Peltier modules for temperature control purposes, thereby avoiding the need to immerse the calorimeter in a temperature-controlled water bath, or to use a pump to drive temperature-controlled water around a chamber surrounding the calorimeter. Instead, the device is placed on a vibration-isolation table under an airtight, insulated, hood and the temperature of the air therein is controlled. An example of the stability of the thermal base-line underpinning lengthy measurement periods is shown in Figure 10. The improved temperature controllability of the surrounds, combined with the increased signal-to-noise ratio of the 'Auckland Peltier microcalorimeter' has thereby enabled the first simultaneous measurements of the heat production, force output and mechanical efficiency of isolated cardiac trabeculae at body temperature (**86, 131**).

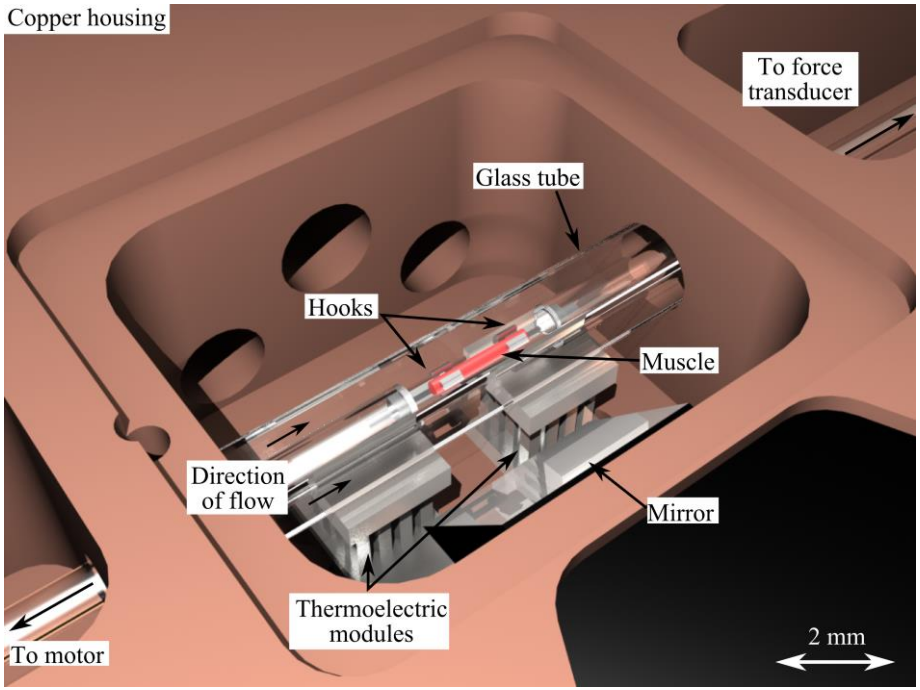

Figure 9. The latest version of the measurement chamber of the 'Auckland Microcalorimeter' in which thermopile chips have been replaced by thermoelectric modules, locate at the bottom and outside the borosilicate tube. When in use, a coverslip is placed atop the copper housing to reduce air currents. Note the mirror, oriented at 45°, to allow the diameter of the trabecula to be estimated in two orthogonal planes. [Reproduced from Figure 1 of Johnston *et al*., 2015 (**86**) under the aegis of the *Rights of Authors of APS Articles*.]

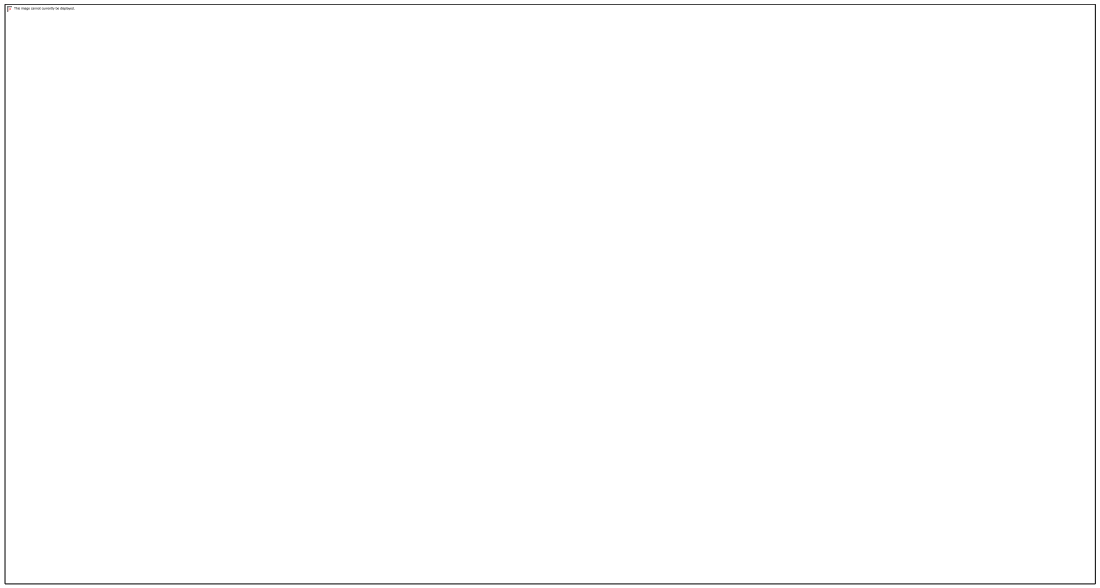

Figure 10. Heat output from a trabecula during the performance of seven after-loaded isotonic contractions of progressively diminishing magnitude, bracketed by isometric contractions, at optimal muscle length. **A:** original data. **B:** data corrected for 1.5 µW linear baseline drift over the 30 min measurement period.

In summary, we have traced the history of myothermic measurements from its infancy, early in the 20th Century, characterised by relatively large muscle preparations contracting at temperatures scarcely above that of freezing, to the present day, when the heat output of preparations some 10 to 50 times smaller can be quantified at temperatures some 40 Kelvin higher. We conclude with a graphical representation (Figure 11) of our view of muscle energetics, (based on equivalent pictorial representation by Gibbs and colleagues {Gibbs, 1979 #62}{Gibbs, 1995 #3275}{Gibbs, 1978 #236}), as encapsulated in Equation 7:

$$\Delta H = Q_B + Q_A + Q_F + W \qquad \text{(Eq 7)}$$

where the subscripts *B*, *A* and *F* denote 'basal', 'activation' and 'force-dependent' heat, respectively.

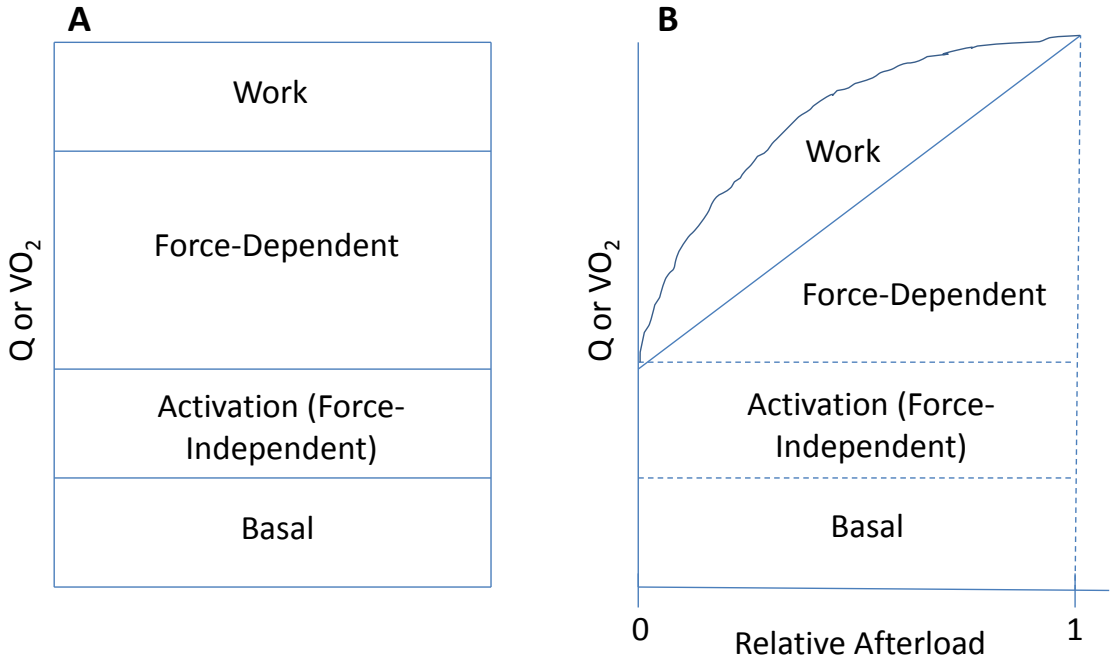

Figure 11. Schematic representations of partitioning of muscle enthalpy expenditure. **A:** the four enthalpic components, the relative contributions of which vary with muscle type and experimental protocols. The work component is zero when the muscle is undergoing isometric contractions. **B:** same as *A* but explicitly for cardiac muscle and with contributions plotted as functions of afterload. The dotted lines indicate uncertainty regarding the dependence on afterload of both force-independent (activation) heat and the rate of basal heat production. **[[Up-touching required – especially use of ΔH on the ordinates.]]**

Table 1: Noteworthy milestones in the history of muscle myothermia

Year	Author	Technique	Species	Muscle	Temperature (°C)	Comment
1848	von Helmholtz	Thermopile 16 Sb-Bi couples	Frog	(skeletal)		
1902	Blix	Thermopile 5 Cu-Constantan* couples				
1911	AV Hill	ibid	Frog	Sartorius	5 - 18	
1920	AV Hill & Hartree	Thermopile 50 Au & Ni couples	Frog	Sartorius	0, 10, 13, 25.5	Oxygen or Nitrogen
1923	Fenn	Ag-constantan	Frog	Sartorius	0	Isotonic heat exceeds isometric heat
1932	Feng		Frog	Sartorius	20	Stretch increases basal heat rate
1937	AV Hill & Downing	Thermopile 70 Manganin** - Constantan couples				Protected region added to thermopile
1938	AV Hill	34 or 42 Constantan-manganin & 28 Constantan-Fe	Frog	Sartorius	0	Shortening heat revealed & mathematical model presented
1940	DK Hill		Frog		0	Recovery heat measured

1940	Ramsey & Street		Frog	Semi-tendonosus	11-13	1st single-fibre length-tension relation
1949	AV Hill		Toad	Semi-membranosus	0	Activation heat estimated
1957	AF Huxley					Sliding-filament mathematical model of Hill's 1938 results
1961	Neill *et al.*	Thermistors in aorta & great cardiac vein	Dog	Closed-chest whole-hearts	37	1st measurement of whole-heart heat
1965	Ricchiuti & Mommaerts					Wire-wound electro-plated thermopiles
1967	Gibbs *et al.*	Thermopile 50 Ag-constantan couples	Rabbit	RV papillary	20	1st cardiac muscle heat measurements
1968	Wilkie					Integrating thermopile
1971	McDonald		Rabbit	Whole-heart	35	Dewar flask calorimetry
1971	Fraser		Frog	Sartorius	15	Golay cell
1972 &1975	Kretzchmar & Wilkie					Novel method of calibration of thermopiles
1977	Mulieri *et al.*	Thermopile 14-20 Bi-Sb couples				Vacuum-deposition thin-film thermopiles
1982	Ponce-Hornos *et al.*	Thermistors	Rabbit	Interventricular septum	35	Perfused tissue
1983	Curtin *et al.*	20 Constantan-Chromel# couples	Frog	Tibialis anterior	3 - 20	1st single-fibre heat recording
1988	Daut & Elzinga	6 Chromel-constantan thermocouples	Guinea-pig	RV trabeculae	37	Flow-through microcalorimetry (sans mechanics)

2005	Taberner *et al*.	Infra-red thermopiles	Rat	RV trabeculae	20	Flow-through microcalorimetry
2009	Taberner *et al*.	Infra-red thermopiles	Rat	RV trabeculae	20	Flow-through microcalorimetry (fixed-end twitches)
2011	Taberner *et al*.	Infra-red thermopiles	Rat	RV trabeculae	20	Flow-through microcalorimetry (work-loops)
2014	Johnston *et al*.	Peltier heat-pumps	Rat	RV	37	Flow-through microcalorimetry (with mechanics)

*Constantan: copper (55%) – nickel (45%) alloy

** Manganin: copper(86&) – manganese (12%) – nickel (5%) alloy

Chromel: nickel (90%) – chromium (10%) alloy

REFERENCES

1. Alpert, NR, Blanchard, EM , Mulieri, LA. Tension-independent heat in rabbit papillary muscle. *Journal of Physiology* **414**: 433-453, 1989.

2. Barclay, CJ. Effect of fatigue on rate of isometric force development in mouse fast- and slow-twitch muscles. *American Journal of Physiology* **263**: C1065-C1072, 1993.

3. Barclay, CJ. Efficiency of fast-and slow-twitch muscles of mouse performing cyclic contractions. *Journal of Experimental Biology* **193**: 65-78, 1994.

4. Barclay, CJ. Mechanical efficiency and fatigue of fast and slow muscles of the mouse. *Journal of Physiology* **497**: 781-794, 1996.

5. Barclay, CJ. Quantifying Ca^{2+} release and inactivation of Ca^{2+} release in fast- and slow-twitch muscles. *The Journal of Physiology* **590**: 6199-6212, 2012.

6. Barclay, CJ, Arnold, PD , Gibbs, CL. Fatigue and heat production in repeated contractions of mouse skeletal muscle. *Journal of Physiology* **488**: 741-752, 1995.

7. Barclay, CJ, Constable, JK , Gibbs, CL. Energetics of mouse fast- and slow-twitch muscles of the mouse. *Journal of Physiology* **472**: 61-80, 1993.

8. Barclay, CJ, Curtin, NA , Woledge, RC. Changes in crossbridge and non-crossbridge energetics during moderate fatigue of frog muscle fibres. *Journal of Physiology* **468**: 543-555, 1993.

9. Barclay, CJ, Lichtwark, GA , Curtin, NA. The energetic cost of activation in mouse fast-twitch muscle is the same whether measured using reduced filament overlap or *N*-benzyl-*p*-toluenesulphonamide. *Acta Physiologica* **193**: 381-391, 2008.

10. Barclay, CJ , Weber, CL. Slow skeletal muscles of the mouse have greater initial efficiency than fast muscles but the same net efficiency. *J Physiol (Lond)* **559**: 519-533, 2004.

11. Barclay, CJ , Widén, C. Efficiency of cross-bridges and mitochondria in mouse cardiac muscle, Muscle Biophysics: From Molecules to Cells, Advances in Experimental Medicine and Biology 682, D. Rassier, 2010, Springer Science+Business Media LLC New York

12. Barclay, CJ, Widén, C , Mellors, LJ. Initial mechanical efficiency of isolated cardiac muscle. *The Journal of Experimental Biology* **206**: 2725-2732, 2003.

13. Barclay, CJ, Woledge, RC , Curtin, NA. Is the efficiency of mammalian (mouse) skeletal muscle temperature dependent? *Journal of Physiology* **588**: 3819-3831, 2010.

14. Baxi, J, Barclay, CJ , Gibbs, CL. Energetics of rat papillary muscle during contractions with sinusoidal length changes. *American Journal of Physiology* **278**: H1545-1554, 2000.

15. Blix, M. Studien über Muskelwärme. *Acta Physiologica* **12**: 52-128, 1902.

16. Bonazzola, P, Egido, P, Marengo, FD, Savio-Galimberti, E , Ponce-Hornos, JE. Lithium and KB-R7943 effects on mechanics and energetics of rat heart muscle. *Acta Physiologica Scandinavica* **176**: 1-11, 2002.

17. Bonazzola, P , Ponce-Hornos, JE. Effects of caffeine on energy output of rabbit heart muscle. *Basic Research in Cardiology* **82**: 428-436, 1987.

18. Buschman, HP, Elzinga, G , Woledge, RC. The effects of the level of activation and shortening velocity on energy output in type 3 muscle fibres from Xenopus laevis. *Pflugers Archiv* **433**: 153-159, 1996.

19. Buschman, HP, Elzinga, G , Woledge, RC. Energetics of shortening depend on stimulation frequency in single muscle fibres from Xenopus laevis at 20 degrees C. *Pflugers Archiv* **430**: 160-167, 1995.

20. Buschman, HPJ, van der Laarse, WJ, Stienen, GJM , Elzinga, G. Force-dependent and force-independent heat production in single slow- and fast-twitch muscle fibres from *Xenopus laevis*. *Journal of Physiology* **496**: 503-519, 1996.

21. Chapman, JB , Gibbs, CL. An energetic model of muscle contraction. *Biophysical Journal* **12**: 227-236, 1972.

22. Chapman, JB , Gibbs, CL. Energetics of isometric and isotonic twitches in toad sartorius. *Biophysical Journal* **12**: 215-226, 1972.

23. Chapman, JB , Gibbs, CL. Fluorometric and myothermic studies of cardiac energetics, Basic Functions of Cations in Myocardial Activity, A. Fleckenstein and N. S. Dhalla, 1975, University Park Press Baltimore

24. Chapman, JB, Gibbs, CL , Loiselle, DS. Simultaneous heat and fluorescence changes in cardiac muscle at high rates of energy expenditure: effects of caffeine and isoprenaline. *Journal of Molecular and Cellular Cardiology* **9**: 715-732, 1977.

25. Consolini, AE, Marquez, MT , Ponce-Hornos, JE. A comparison of no-flow and low-flow ischemia in the rat heart: an energetic study. *Canadian Journal of Physiology and Pharmacology* **79**: 551-558, 2001.

26. Constable, JK, Barclay, CJ , Gibbs, CL. Energetics of lengthening in mouse and toad skeletal muscle. *Journal of Physiology* **505**: 205-215, 1997.

27. Coulson, RL. Energetics of isovolumic contractions of the isolated rabbit heart. *The Journal of Physiology* **260**: 45-53, 1976.

28. Coulson, RL , Rusy, BF. A system for assessing mechanical performance, heat producition, and oxygen utulization of isolated perfused whole hearts. *Cardiovascular Research* **7**: 859-869, 1973.

29. Curtin, NA, Howarth, JV, Rall, JA, Wilson, MGA , Woledge, RC. Simultaneous heat and tension measurements from single muscle cells, Contractile mechanisms in muscle, G. H. Pollack and H. Sugi, 1984, Plenum Publishing Corporation

30. Curtin, NA, Howarth, JV , Woledge, RC. Heat production by single fibres of frog muscle. *Journal of Muscle Research and Cell Motility* **4**: 207-222, 1983.

31. Daut, J , Elzinga, G. Heat production of quiescent ventricular trabeculae isolated from guinea-pig heart. *Journal of Physiology* **398**: 259-275, 1988.

32. Daut, J , Elzinga, G. Heat production of the sodium pump in guinea-pig cardiac muscle. *Pflugers Archiv* **411**: R12, 1988.

33. Daut, J , Elzinga, G. Substrate dependence of energy metabolism in isolated guinea-pig cardiac muscle: a microcalorimetric study. *Journal of Physiology* **413**: 379-397, 1989.

34. Daut, J, Groß, T , Elzinga, G. The contribution of the sodium pump to the basal metabolism of isolated cardiac muscle: a calorimetric study. *Thermochimica Acta* **193**: 269-280, 1991.

35. Davey, DF, Gibbs, CL , McKirdy, HC. Structural, mechanical and myothermic properties of rabbit rectococcygeus muscle. *Journal of Physiology* **248**: 207-230, 1975.

36. Einthoven, W. The string galvanometer and the measurement of the action currents of the heart (Nobel Lecture, December 11, 1925), Selected Papers on Electocardiography of Willem Einthoven, H. Snellen, 1925, Leiden University Press Leiden

37. Fenn, WO. A quantitative comparison between the energy liberated and the work performed by the isolated sartorius muscle of the frog. *Journal of Physiology* **58**: 175-203, 1923.

38. Fenn, WO. The relationship between the work performed and the energy liberated in muscular contraction. *Journal of Physiology* **58**: 373-395, 1924.

39. Fischer, E. The heat liberated by the beating heart. *Proceeding of the Royal Society of London Series B* **99**: 326-339, 1926.

40. Fraser, A , Carlson, FD. Initial Heat Production in Isometric Frog Muscle at 15°C. *The Journal of General Physiology* **62**: 271-285, 1973.

41. Fraser, AB. Myothermic radiometry. *Review of Scientific Instruments* **42**: 22-26, 1971.

42. Gibbs, CL. Cardiac energetics. *Physiological Reviews* **58**: 174-254, 1978.

43. Gibbs, CL. Changes in cardiac heat production with agents that alter contractility. *Australian Journal of Experimental Biology and Medical Science* **45**: 379-392, 1967.

44. Gibbs, CL. Factors affecting efficiency of cardiac contraction. *Advances in Cardiology* **12**: 139-148, 1974.

45. Gibbs, CL. Role of catecholamines in heat production in the myocardium. *Circulation Research* **XX and XXI**: III-223 - III-230, 1967.

46. Gibbs, CL , Chapman, JB. Cardiac energetics, The Cardiovascular System, Handbook of Physiology, R. M. Berne and N. Sperelakis, 1979, American Physiological Society Bethesda, MD

47. Gibbs, CL , Chapman, JB. Cardiac heat production. *Annual Review of Physiology* **41**: 507-519, 1979.

48. Gibbs, CL , Gibson, WR. Effect of ouabain on the energy output of rabbit cardiac muscle. *Circulation Research* **XXIV**: 951-967, 1969.

49. Gibbs, CL , Gibson, WR. Isoprenaline, propranolol, and the energy output of rabbit cardiac muscle. *Cardiovascular Research* **6**: 508-515, 1972.

50. Gibbs, CL , Loiselle, DS. Effect of temperature on mechanical and myothermic properties of rabbit smooth muscle. *American Journal of Physiology* **238**: C49-C55, 1980.

51. Gibbs, CL, Loiselle, DS , Wendt, IR. Activation heat in rabbit cardiac muscle. *Journal of Physiology* **395**: 115-130, 1988.

52. Gibbs, CL, Mommaerts, WFHM , Ricchiuti, NV. Energetics of cardiac contractions. *Journal of Physiology* **191**: 25-46, 1967.

53. Gibbs, CL, Ricchiuti, NV , Mommaerts, WFHM. Activation heat in frog sartorius muscle. *Journal of General Physiology* **49**: 517-535, 1966.

54. Gibbs, CL , Ricchiutti, NV. Activation heat in muscle: method for determination. *Science* **147**: 162-163, 1965.

55. Gibbs, CL , Vaughan, P. The effect of calcium depletion upon the tension-independent component of cardiac heat production. *Journal of General Physiology* **52**: 532-549, 1968.

56. Goo, S, Han, J-C, Nisbet, LA, LeGrice, IJ, Taberner, AJ , Loiselle, DS. Dietary pre-exposure of rats to fish oil does not enhance myocardial efficiency of isolated working-hearts or their left ventricular trabeculae. *Journal of Physiology (London)* **592**: 1795-1808, 2014.

57. Goo, S, Han, J-C, Nisbet, LA, LeGrice, IJ, Taberner, AJ , Loiselle, DS. Dietary supplementation with either saturated or unsaturated fatty acids does not affect the mechanoenergetics of the isolated rat heart. *Physiologyl Reports* **2**: 2014.

58. Groß, T, Lues, I , Daut, J. A new cardiotonic drug reduces the energy cost of active tension in cardiac muscle. *Journal of Molecular and Cellular Cardiology* **25**: 239-244, 1993.

59. Han, J-C, Barrett, CJ, Taberner, AJ , Loiselle, DS. Does reduced myocardial efficiency in systemic hypertensive-hypertrophy correlate with increased left-ventricular thickness? *Hypertension Research* 1-9, 2015.

60. Han, J-C, Goo, S, Barrett, CJ, Mellor, KM, Taberner, AJ , Loiselle, DS. The afterload-dependent peak efficiency of the isolated working rat heart is unaffected by streptozotocin-induced diabetes. *Cardiavascular Diabetology* **13**: 2014.

61. Han, J-C, Taberner, AJ, Kirton, RS, Nielsen, PMF, Archer, R, Kim, N , Loiselle, DS. Radius-dependent decline of performance in isolated cardiac muscle does not reflect inadequacy of diffusive oxygen supply. *American Journal of Physiology* **300**: H1222-H1236, 2011.

62. Han, J-C, Taberner, AJ, Kirton, RS, Nielsen, PMF, Smith, NP , Loiselle, DS. A unique micromechanocalorimeter for simultaneous measurement of heat rate and force production of cardiac trabeculae carneae. *Journal of Applied Physiology* **107**: 946-951, 2009.

63. Han, J-C, Taberner, AJ, Nielsen, PMF, Kirton, RS, Ward, M-L , Loiselle, DS. Energetics of stress production in isolated cardiac trabeculae from the rat. *American Journal of Physiology* **299**: H1382-H1394, 2010.

64. Han, J-C, Taberner, AJ, Nielsen, PMF , Loiselle, DS. Interventricular comparison of the energetics of contraction of trabeculae carneae isolated from the rat Heart. *Journal of Physiology (London)* **591**: 701-717, 2013.

65. Han, J-C, Taberner, AJ, Tran, K, Goo, S, Nickerson, DP, Nash, MP, Nielsen, PMF, Crampin, EJ , Loiselle, DS. Comparison of the Gibbs and Suga formulations of cardiac energetics: the demise of "isoefficiency". *Journal of Applied Physiology* **113**: 996-1003, 2012.

66. Han, J-C, Taberner, AJ, Tran, K, Nickerson, DP, Nash, MP, Nielsen, PMF, Crampin, EJ , Loiselle, DS. Relating components of pressure-volume area in Suga's formulation of cardiac energetics to components of the stress-time Integral *Journal of Applied Physiology* **113**: 988-995, 2012.

67. Han, J-C, Tran, K, Johnston, CM, Nielsen, PMF, Barrett, CJ, Taberner, AJ , Loiselle, DS. Reduced mechanical efficiency in left-ventricular trabeculae of the spontaneously hypertensive rat. *Physiological Reports* **2**: 1-13, 2014.

68. Han, J-C, Tran, K, Nielsen, PMF, Taberner, AJ , Loiselle, DS. Streptozotocin-induced diabetes prolongs twitch duration without affecting the energetics of isolated ventricular trabeculae. *Cardiovascular Diabetology* **13:79**: 1-16, 2014.

69. Hill, AV. The effect of load on the heat of shortening of muscle. *Proceedings of the Royal Society of London B* **159**: 297-318, 1964.

70. Hill, AV. The heat of activation and the heat of shortening in a muscle twitch. *Proceedings of the Royal Society B* **136**: 195-211, 1949.

71. Hill, AV. Heat of shortening and the dynamic constants of muscle. *Proceedings of the Royal Society of London B* **126**: 136-195, 1938.

72. Hill, AV. The heat produced in contracture and muscular tone. *Journal of Physiology (London)* **XL**: 389-403, 1910.

73. Hill, AV. Methods of analysing the heat production of muscle. *Proceedings of the Royal Society of London. Series B, Biological Sciences* **124**: 114-136, 1937.

74. Hill, AV. The "molecular movements" of sensitive moving-magnet galvanometers. *Journal of Scientific Instruments* **4**: 72-73, 1926.

75. Hill, AV. A note on the heat of activation in a muscle twitch. *Proceeding of the Royal Society of London Series B* **137**: 330-331, 1950.

76. Hill, AV. The position occupied by the production of heat, in the chain of processes constituting a muscular contraction. *Journal of Physiology (London)* **42**: 1-43, 1911.

77. Hill, AV , Hartree, W. The four phases of heat-production of muscle. *Journal of Physiology* **54**: 84-128, 1920.

78. Hill, AV , Woledge, RC. An examination of absolute values in myothermic measurement. *Journal of Physiology* **162**: 311-333, 1962.

79. Hill, DK. The time course of evolution of oxidative recovery heat of frog's muscle. *Journal of Physiology* **98**: 454-459, 1940.

80. Holmes, FL. The old martyr of science: the frog in experimental physiology. *Journal of the History of Biology* **26**: 1993.

81. Homsher, E, Mommaerts, WFHM, Ricchiuti, NV , Wallner, A. Activation heat, activation metabolism and tension-related heat in frog semitendinosus muscles. *The Journal of Physiology* **220**: 601-625, 1972.

82. Howarth, JV, Keynes, RD, Ritchie, JM , von Muralt, A. The heat production associated with the passage of a single impulse in pike olfactory nerve fibres. *The Journal of Physiology* **249**: 349-368, 1975.

83. Huxley, AF. Muscle structure and theories of contraction. *Progress in Biophysics and Biophysical Chemistry* **7**: 255-318, 1957.

84. Jöbsis, FF , Duffield, JC. Force, shortening, and work in muscular contraction: relative contributions to overall energy utilization. *Science* **156**: 1388-1392, 1967.

85. Johnson, JB. Thermal agitation of electricity in conductors. *Physical Review* **32**: 97-109, 1928.

86. Johnston, CM, Han, J-H, Ruddy, BP, Nielsen, PMF , Taberner, AJ. A high-resolution thermoelectric-module-based calorimeter for measuring the energetics of isolated ventricular trabeculae at body temperature. *American Journal of Physiology* 2015.

87. Johnston, CM, Ruddy, BP, Nielsen, PMF , Taberner, AJ. (2014) Eighth International Conference on Sensing Technology, Liverpool, UK.

88. Kiriazis, H , Gibbs, CL. Effects of ageing on the activation metabolism of rat papillary muscles. *Clinical and Experimental Pharmacology and Physiology* **28**: 176-183, 2001.

89. Kiriazis, H , Gibbs, CL. Effects of aging on the work output and efficiency of rat papillary muscle. *Cardiovascular Research* **48**: 111-119, 2000.

90. Kiriazis, H , Gibbs, CL. Papillary muscles split in the presence of 2,3-butanedione monoxime have normal energetic and mechanical properties. *American Journal of Physiology* **269**: H1685-H1694, 1995.

91. Kirkes, WH, *Kirkes' Handbook of Physiology*, W. Halliburton, W Wood, New York, 1896

92. Kiyooka, T, Oshima, Y, Fujinaka, W, Iribe, G, Mohri, S , Shimizu, J. Energy for myocardial Ca^{2+} handling per beat increases with heart rate in excised cross-circulated canine heart. *Tokai Journal of Clinical Medicine* **39**: 51-58, 2014.

93. Kobayashi, T , Sugi, H. Measurement of heat production during the summation of isometric contraction on frog skeletal muscle with an infrared radiometer. *Japanese Journal of Physiology* **30**: 617-629, 1980.

94. Kretzschmar, KM , Wilkie, DR. A new method for absolute heat measurement, utilizing the Peltier effect. *Journal of Physiology* **224**: 18P-20P, 1972.

95. Kretzschmar, KM , Wilkie, DR. The use of the Peltier effect for simple and accurate calibration of thermoelectric devices. *Proceedings of the Royal Society of London (Series B)* **190**: 315-321, 1975.

96. Lewis, DB , Barclay, CJ. Efficiency and cross-bridge work output of skeletal muscle is decreased at low levels of activation. *Pflugers Archiv - European Journal of Physiology* **466**: 599-609, 2014.

97. Loiselle, DS , Gibbs, CL. Species differences in cardiac energetics. *American Journal of Physiology* **237**: H90-H98, 1979.

98. Loiselle, DS, Stienen, GJM, Daut, J , Elzinga, G. Heat production and ATPase activity of intact and chemically skinned rat cardiac trabeculae at rest. *Biophysics (Life Science Advances)* **12**: 51-57, 1993.

99. Loiselle, DS, Stienen, GJM, van Hardeveld, C, van der Meulen, ET, Zahalak, GI, Daut, J , Elzinga, G. The effect of hyperosmolality on the rate of heat production of quiescent trabeculae isolated from the rat heart. *Journal of General Physiology* **108**: 497-514, 1996.

100. Marengo, FD, Marquez, MT, Bonazzola, P , Ponce-Hornos, JE. The heart extrasystole: an energetic approach. *American Journal of Physiology* **276**: H309-H316, 1999.

101. Marquez, MT, Consolini, A, Bonazzola, P , Ponce-Hornos, JE. The energetics of the quiescent heart muscle: high potassium cardioplegic solution and the influence of calcium and hypoxia on the rat heart. *Acta Physiologica Scandinavica* **160**: 229-233, 1997.

102. McDonald, RH. Myocardial heat production: its relationship to tension development. *American Journal of Physiology* **220**: 894-900, 1971.

103. Mellors, LJ , Barclay, CJ. The energetics of rat papillary muscles undergoing realistic strain patterns. *The Journal of Experimental Biology* **204**: 3765-3777, 2001.

104. Mellors, LJ, Gibbs, CL , Barclay, CJ. Comparison of the efficiency of rat papillary muscles during afterloaded isotonic contractions and contractions with sinusoidal length changes. *The Journal of Experimental Biology* **204**: 1765-1774, 2001.

105. Mulieri, LA, Luhr, G, Trefry, J , Alpert, NR. Metal-film thermopiles for use with rabbit right ventricular papillary muscles. *American Journal of Physiology* **233**: C146-C156, 1977.

106. Neill, WA, Levine, HJ, Wagman, RJ, Messer, JV, Krasnow, N , Gorlin, R. Left ventricular heat production measured by coronary flow and temperature gradient. *Journal of Applied Physiology* **16**: 883-890, 1961.

107. Nozawa, T, Yasumura, Y, Futaki, S, Tanaka, N , Suga, H. No significant increase in O_2 consumption of KCl-arrested dog heart with filling and dobutamine. *American Journal of Physiology* **255**: H807-H812, 1988.

108. Paul, RJ, Wendt, IR, Walker, JS , Gibbs, CL. Smooth muscle energetics: testing theories of crossbridge regulation. *Progress in Clinical and Biological Research* **327**: 29-38, 1990.

109. Pepe, S , McLennan, PL. Cardiac membrane fatty acid composition modulates myocardial oxygen consumption and postischemic recovery of contractile function. *Circulation* **105**: 2303-2308, 2002.

110. Pepe, S , McLennan, PL. (n-3) Long chain PUFA dose-dependently increase oxygen utilization efficiency and inhibit arrhythmias after saturated fat feeding in rats. *Journal of Nutrition* **137**: 2377-2383, 2007.

111. Ponce-Hornos, JE, Bonazzola, P, Marengo, FD, Consolini, AE , Márquez, MT. Tension-dependent and tension-independent energy components of heart contraction. *Pflugers Archiv - European Journal of Physiology* **429**: 841-851, 1995.

112. Ponce-Hornos, JE, Bonazzola, P , Taquini, AC. The role of extracellular sodium on heart muscle energetics. *Pflugers Archiv* **409**: 163-168, 1987.

113. Ponce-Hornos, JE, Musi, EA , Bonazzola, P. Role of extracellular calcium on heart muscle energetics: effects of verapamil. *American Journal of Physiology* **258**: H64-H72, 1990.

114. Ponce-Hornos, JE, Parker, JM , Langer, GA. Heat production in isolated heart myocytes: differences among species. *American Journal of Physiology* **258**: H880-H886, 1990.

115. Ponce-Hornos, JE, Philipson, KD, Bonazzola, P , Langer, GA. Energetics of Na^{+}-Ca^{2+} exchange in resting cardiac muscle. *Biophysical Journal* **77**: 3319-3327, 1999.

116. Ponce-Hornos, JE, Ricchiuti, NV , Langer, GA. On-line calorimetry in the arterially perfused rabbit interventricular septum. *American Journal of Physiology - Heart and Circulatory Physiology* **243**: H289-H295, 1982.

117. Ponce-Hornos, JE , Taquini, AC. Calcium effects on contractility and heat production in mammalian myocardium. *American Journal of Physiology* **251**: H127-H132, 1986.

118. Ramsey, RW , Street, SF. The isometric length-tension diagram of isolated skeletal muscle fibers of the frog. *Journal of Cellular and Comparative Physiology* **15**: 11-34, 1940.

119. Ricchiuti, NV , Gibbs, CL. Heat production in a cardiac contraction. *Nature* **208**: 897-898, 1965.

120. Ricchiuti, NV , Mommaerts, WFJM. Technique for myothermic measurements. *Physiologist* **8**: 259, 1965.

121. Ringer, S. A further contribution regarding the influence of the different constituents of the blood on the contraction of the heart. *Journal of Physiology* **4**: 29-42, 1883.

122. Savio-Galimberti, E , Ponce-Hornos, JE. Effects of caffeine, verapamil, lithium, and KB-R7943 on mechanics and energetics of rat myocardial bigeminies. *Am J Physiol Heart Circ Physiol* **290**: H613-623, 2006.

123. Smith, ICH. Energetics of activation in frog and toad muscle. *Journal of Physiology* **220**: 583-599, 1972.

124. Snyder, CD. The heat liberated by the beating heart, Third communication: the oscillations of temperature during the cardiac cycle, or the thermocardiogram of the terrapin. *American Journal of Physiology* **59**: 254-280, 1922.

125. Snyder, CD. The heat liberated by the beating heart: Fourth communication. *American Journal of Physiology* **63**: 583-589, 1923.

126. Snyder, CD. On the heat liberated by the beating heart. *American Journal of Physiology* **44**: 421-452, 1917.

127. Snyder, CD. On the heat liberated by the beating heart: second communication. *American Journal of Physiology* **47**: 156-165, 1918.

128. Suga, H. Ventricular energetics. *Physiological Reviews* **70**: 247-277, 1990.

129. Taberner, AJ, Han, J-C, Loiselle, DS , Nielsen, PMF. An innovative work-loop calorimeter for in vitro measurement of the mechanics and energetics of working cardiac trabeculae. *Journal of Applied Physiology* **111**: 1798-1803, 2011.

130. Taberner, AJ, Hunter, IW, Kirton, RS, Nielsen, PMF , Loiselle, DS. Characterization of a flow-through microcalorimeter for measuring the heat production of cardiac trabeculae. *Review of Scientific Instruments* **76**: 104902: 1-7, 2005.

131. Taberner, AJ, Johnston, CM, Pham, T, Han, J-C, Ruddy, BP, Loiselle, DS , Nielsen, PMF. (2015) 37th Annual International Conference of the IEEE Engineering in Medicine and Biology Society,

132. ter Keurs, HE, Rijnsburger, WH, van Heuningen, R , Nagelsmit, MJ. Tension development and sarcomere length in rat cardiac traeculae. Evidence of length-dependent activation. *Journal of Physiology (London)* **46**: 191-197, 1980.

133. Theisohn, M, Friedrich, M, Justus, P, Guttler, K , Klaus, W. Heat production and oxygen consumption of the isolated rabbit heart: their relations to mechanical function. *Basic Res. Cardiol* **72**: 19-33, 1977.

134. von Helmholtz, HLF. Ueber die Wärmeentwickelung bei der Muskelaction. *Archiv für Anatomie, Physiologie und Wissenschaftliche Medicin in verbindung mit mehreren gelehrten herausgegeben* 144-164, 1848.

135. Walker, JS, Wendt, IR , Gibbs, CL. Heat production of rat anococcygeus muscle during isometric contraction. *American Journal of Physiology* **255**: C536-C542, 1988.

136. Wendt, IR , Gibbs, CL. Energy expenditure of longitudinal smooth muscle of rabbit urinary bladder. *American Journal of Physiology* **252**: C88-C96, 1987.

137. Wendt, IR , Paul, RJ. Energy cost of contraction in rat urinary bladder smooth muscle during anoxia. *Clinical & Experimental Pharmacology & Physiology* **30**: 565-569, 2003.

138. Wilkie, DR. Heat work and phosphorylcreatine break-down in muscle. *J Physiol* **195**: 157-183, 1968.